Taylor
Wide Office Chair

Assembly & Care Instructions

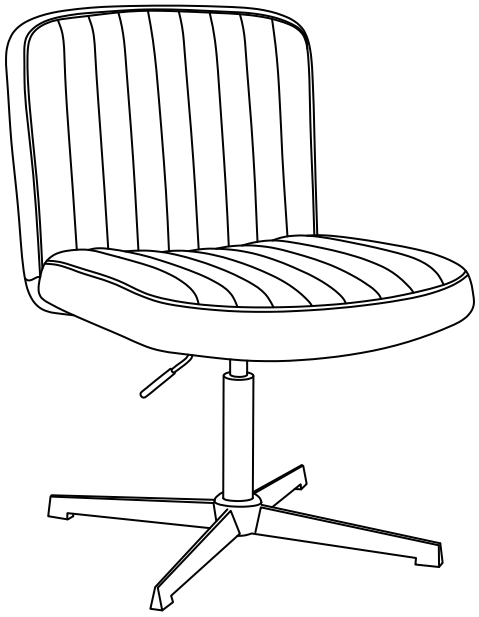

Dunelm

www.dunelm.com

Getting Started.

1. Check you have received all parts listed on the component and hardware pages and the correct quantity of each. Beware that sometimes parts are packaged within the product so not immediately visible after opening. Please check the assembly section for more details. If anything is missing, stop assembling the product and contact our customer service team.
2. Check all parts are intact and undamaged. Any issues, stop assembling the product and contact our customer service team.

Safety advice.

Dear Customer

- **IMPORTANT** – The first step you need to take is to ensure your safety! Please take the time to read and understand these instructions before assembling the product.
- Please keep these instructions for future reference.
- This item is intended for indoor use only – unless otherwise specified. Avoid exposure to humid conditions.
- Assembly to be carried out by a competent adult only.
- During assembly children should be kept away from the product due to possible risk of injury. The product may contain small parts that could also cause choking if swallowed.
- Products can be dangerous if incorrectly installed or assembled. Assembly should be carried out by a competent person and instructions followed. No liability will be accepted for damage or injury caused by incorrectly installed or assembled products.
- Never use an electric drill to assemble a product, as this can cause damage to parts.
- Regularly check all fastenings to ensure that they are properly tightened.
- Restrain children from climbing or playing on or around the product. Always consider where products are positioned to ensure children cannot get access to long cords or windows.
- Some products will be supplied with anti – tip kits which should always be used to secure the product to the wall and prevent tipping.
- Keep all plastic wrapping materials away from babies and children to avoid danger of suffocation.
- Ensure that all packaging is disposed of carefully and responsibly. Please recycle where possible.
- Once items are part or fully assembled, they are not returnable unless faulty.

Max weight limit	No. of people to assemble	Assembly difficulty	Time to assemble
110 KG	1 recommended	Easy	<30 minutes

Parts supplied.

Ref	Part	Visual	Qty
1	Back	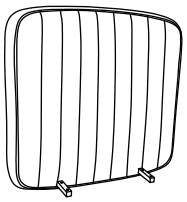	1
2	Seat	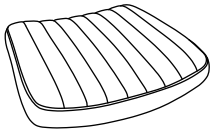	1
3	Lifting gear		1
4	Gas lift		1
5	Cap		1
6	Four-Star base	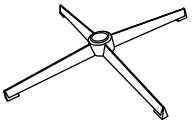	1

Hardware supplied.

Ref	Hardware & dimension(mm)	Qty
A	Bolt M6×18mm	4
B	Bolt M6×16mm	2
C	Bolt M6×25mm	2
D	M6φ18mm	8
E	M6φ18mm	2

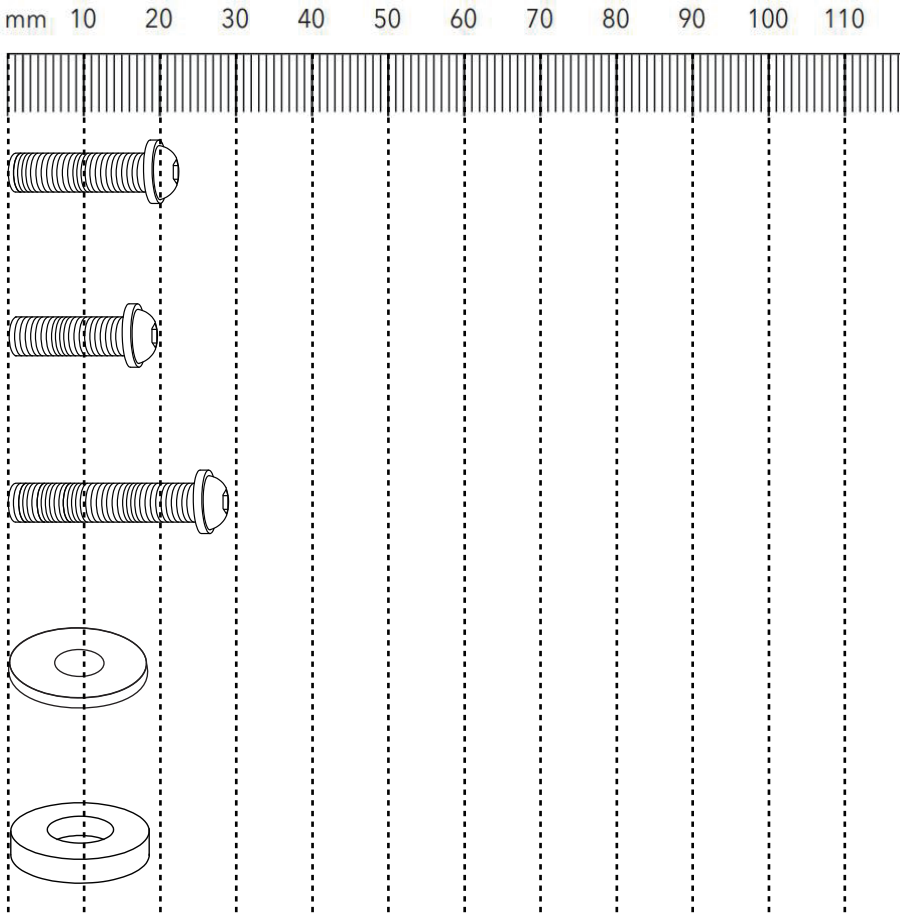

Ref	Visual	Qty
F		1

Exploded diagram.

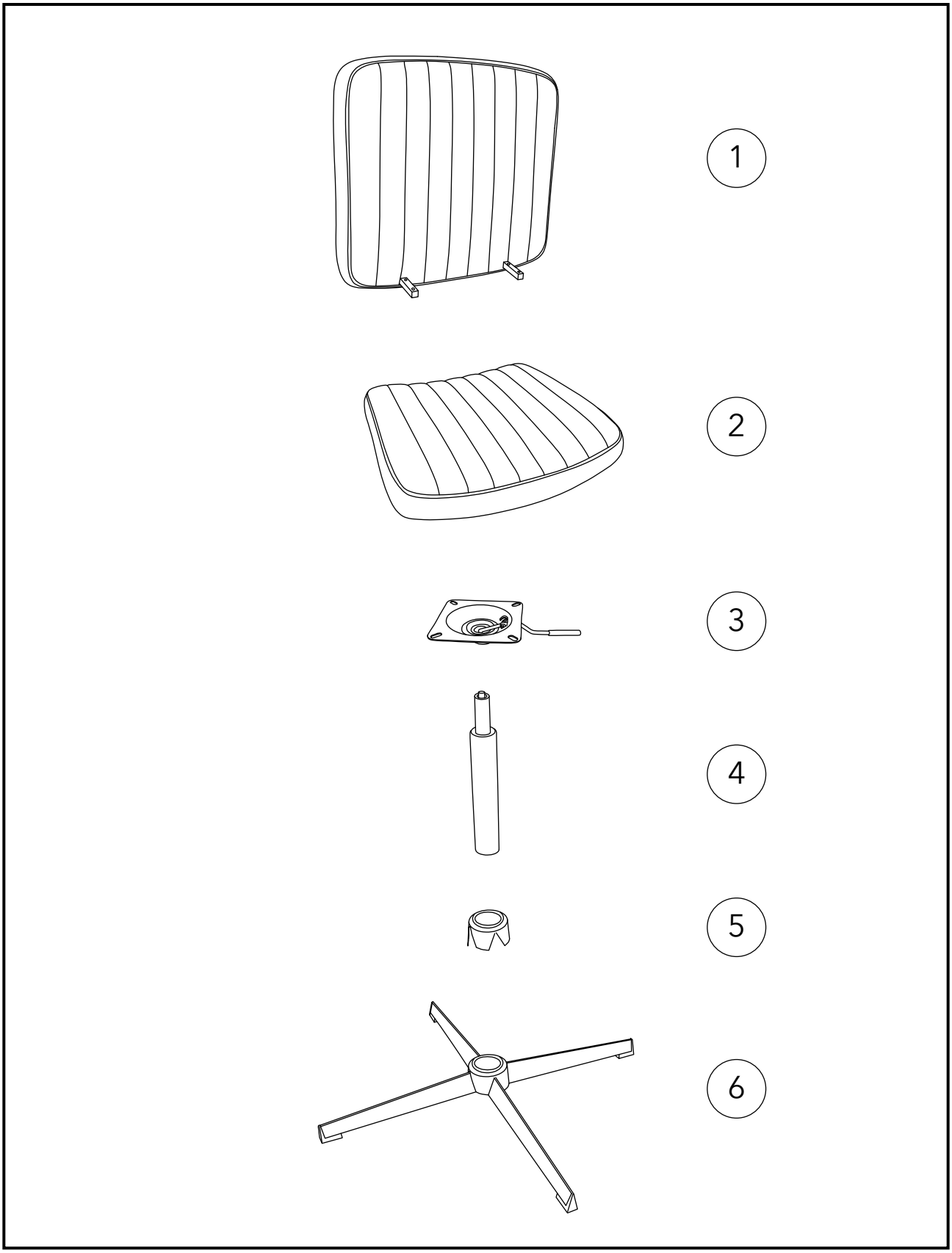

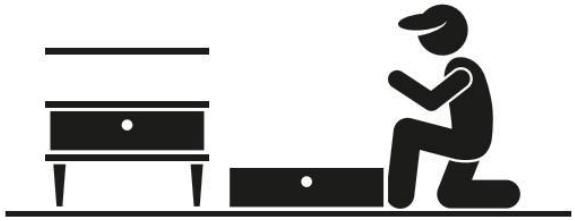	**ALWAYS** lay each panel down on a clean and level area, ideally in the room of intended use, ensuring there is enough room to maneuver around the item.
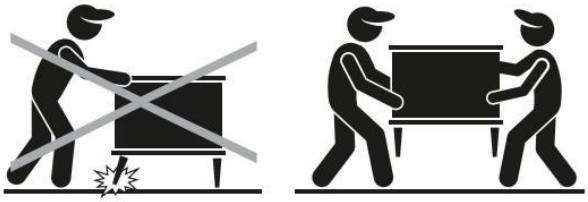	**NEVER** pull furniture into place as this causes damage to the internal structure and feet fixings. Aways lift to move.
	NEVER flip your uphplstery allowing corners to hit the floor as structural damage can be caused. Aways turn gently.

1

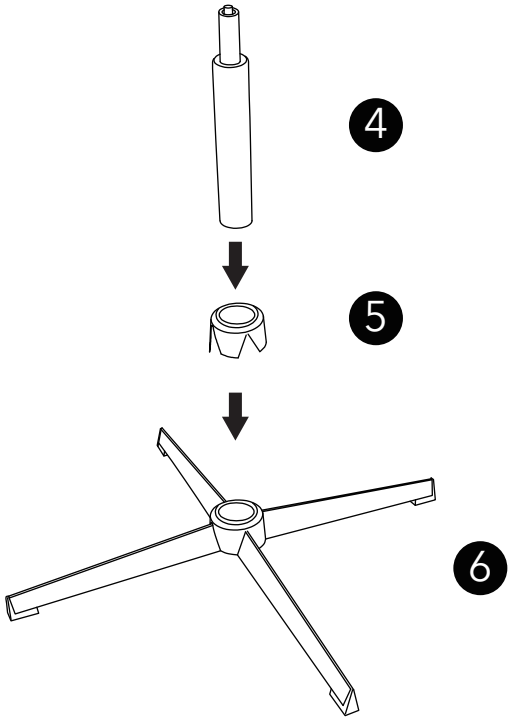

2

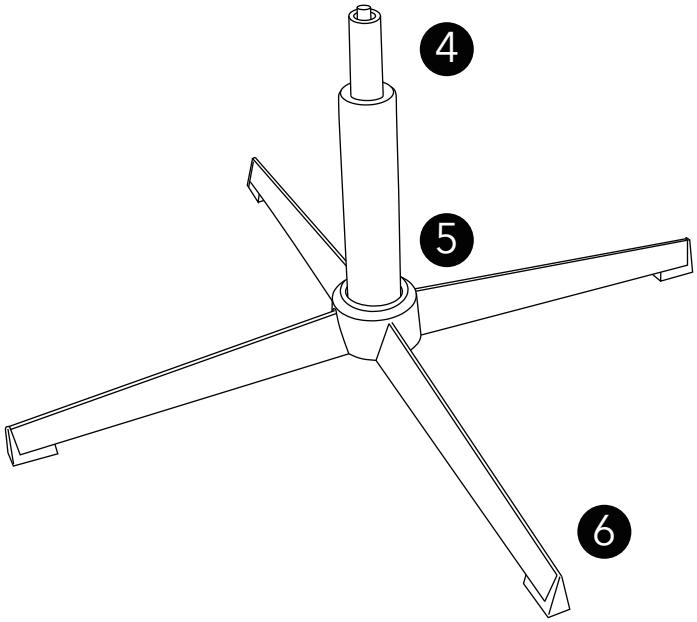

3

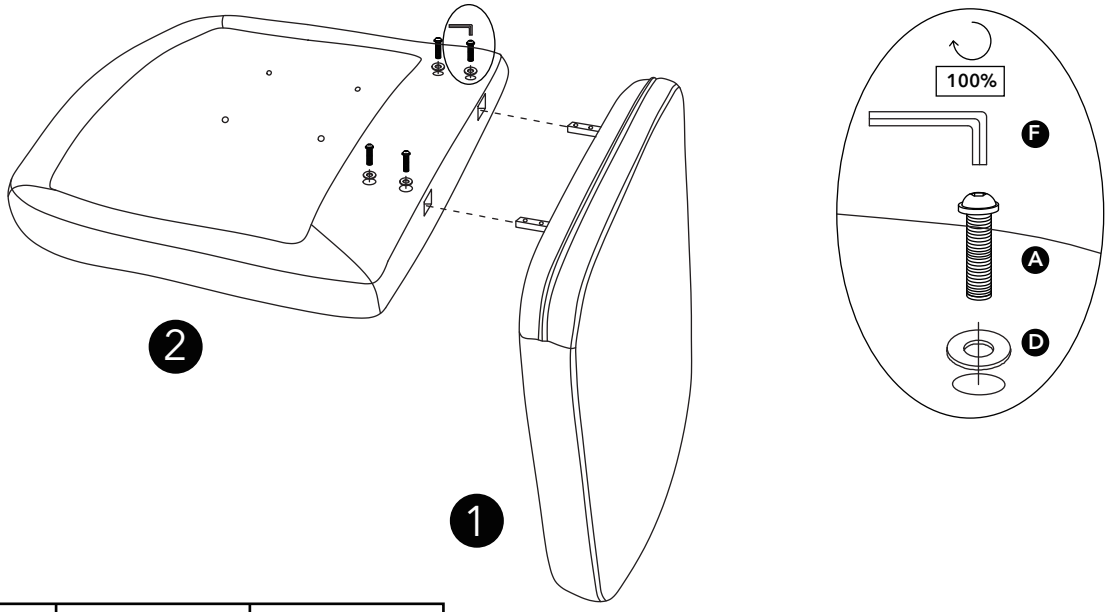

A x 4	D x 4	F x 1
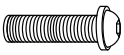		

4

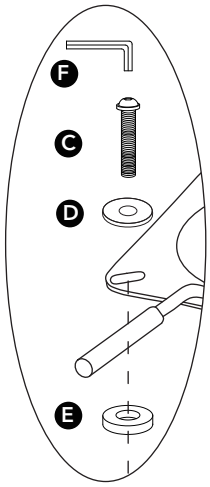

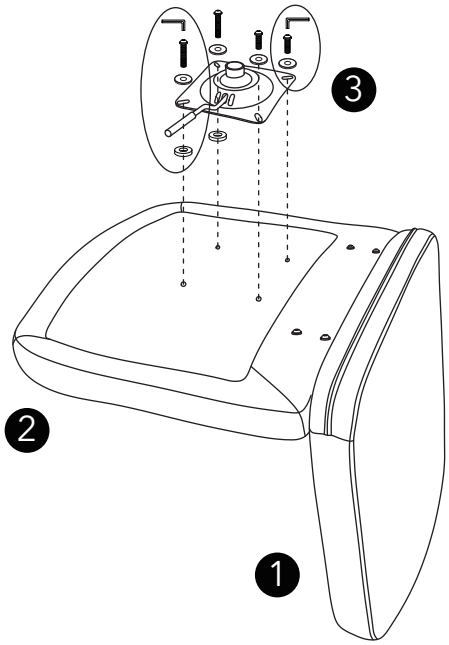

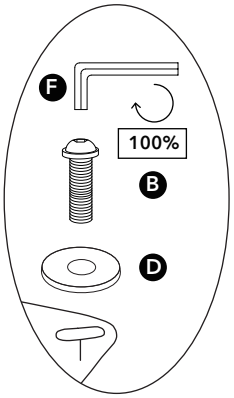

C x 4	B x 4	D x 4	E x 4	F x 1
	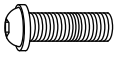		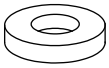	

5

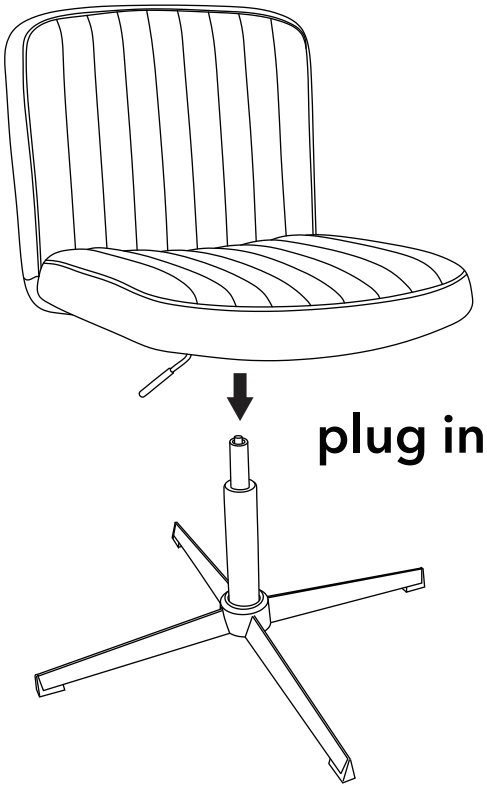

Final product.

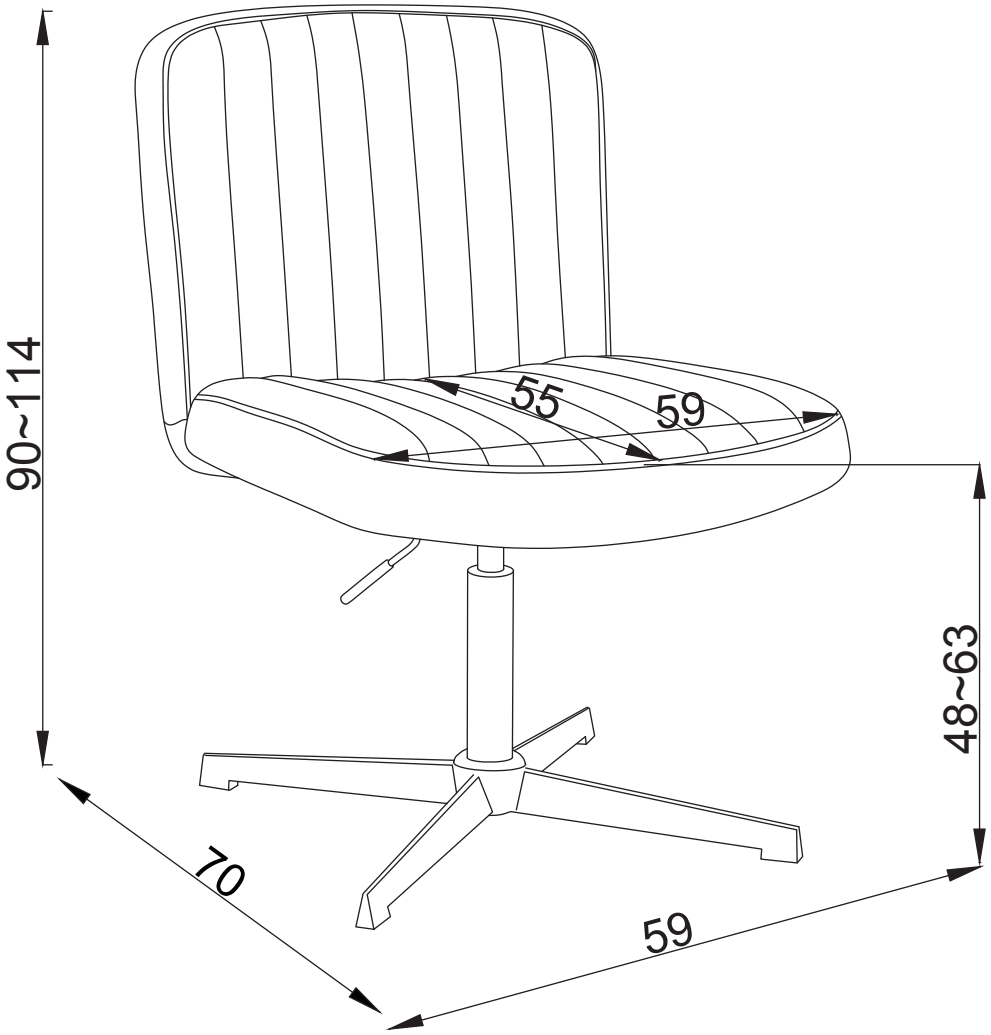

General Care

- **DO** from time-to-time check that there are no loose screws or bolts, and the frame is stable. Stop using the product if still unstable after all screws and bolts are tightened.
- **DO** minimise surface fabrics from fuzzing or pilling with use by following our cushion care advice. De-bobble if necessary.
- **DO** keep out of direct sunlight as discolouration, fading and fabric deterioration can occur.
- **DO** avoid using in sunny conservatories or rooms with direct sunlight as discolouration, fading and fabric deterioration can occur.
- **DO** position 30cm away from heat sources, such as radiators, to prevent fading or marks.
- **DO** restrain children and pets from climbing, jumping or clawing at upholstery.
- **DO** consider the colour choice of your soft furnishings (dark-coloured scatters on light coloured upholstery) to avoid colour transfer. Be aware that dye transfer from clothing, such as denim, can be permanent.
- **DO** ensure that the plastic or felt protectors are securely fitted and in place when furniture is on a wooden or laminate floor.
- **DO NOT** use in excessively cold, hot or humid rooms as structural and fabric damage can occur.
- **DO NOT** place hot items such as cups, laptops or hot water bottles directly onto upholstery as permanent marks may occur.
- **DO NOT** allow household chemicals such as baby wipes, fake tan, cleaning solutions and skin lotions contacting the surface fabric as these can cause damage and stains.
- **DO NOT** allow sharp items such as toys, buckles or jewellery contacting the surface fabric as these can snag, pull or tear them.
- **NEVER** pull or cut fabric threads that have been snagged. Always thread them back into the fabric.
- **NEVER** drag furniture as this can weaken the frame and feet fixings. Always lift to move.
- **NEVER** sit on furniture arms as irreversible structural damage can be caused.
- **NEVER** rock backwards on two legs of chairs, as this will weaken the joints.

General Cleaning

- **DO** vacuum and brush weekly with a soft brush, as dust and dirt build up will accelerate wear and dull colours.
- **DO** address spills and stains immediately to avoid them settling into the fabric fibres. Blot or soak up spills with a dry soft colourfast cloth.
- **DO** use specialist upholstery cleaners and always follow the manufacturer's instructions. Spot test on a hidden area before using. We recommend using a professional cleaning service for cleaning your furniture in situ for the best results.
- **DO NOT** soak or allow the fabric to become wet.
- **NEVER** rub, scrub or use washing up liquid, detergents or bleach on stains as this could damage the fabric and cause discolouration.
- **NEVER** wash or dry clean covers, including cushion covers provided with upholstery items, as this can affect the fire-resistant and other added coatings the fabric has been treated with. It can also impact the long-term performance of the fabric and result in colour change or premature fading.

Timber Care

- **DO** periodically check feet and re-tighten if required.
- **DO** clean timber using a damp cloth and mild detergent.
- **DO NOT** use bleach or abrasive cleaners on timber components such as feet or arms.
- **DO NOT** place directly in front of heat sources such as radiators or fires as this can cause cracking or warping over time which can weaken the frame of your upholstery item.
- Timber is affected by temperature and humidity. Un-lacquered timber feet can discolour in strong direct sunlight, so avoid.
- **NEVER** place upholstery items with wooden legs/ feet on a damp floor or use outside.

Leather Care

- Leather is a natural product and can display natural characteristics such as healed scars, uneven grain and creases. These are natural features, not faults.
- Leather upholstery is not suitable for conservatories or areas of intense sunlight.
- Overtime leather ages and colour change may be visible in areas of most use. Switch cushions and turn regularly to spread use and minimise this.
- **DO** wipe with a soft dry cloth weekly to remove any dust and debris.
- **DO** use a leather conditioner to help maintain the leather.
- **DO** use specialist leather cleaners if necessary and always follow the manufacturer's instructions. Spot test on a hidden area such as the back or underside of the product before using. We recommend using a professional cleaning service in situ for the best results.
- **DO NOT** use detergent cleaners or cleaning products not designed for leather.
- **DO NOT** vacuum leather or clean with water as this can cause permanent scratches or stains.
- **DO NOT** place direct heat sources near or onto the leather as this can cause surface appearance changes.

Faux Leather Care

- Faux leathers can naturally age like natural leather, causing colour change in areas of most use. Switch cushions and turn regularly to spread use and minimise this.
- **NEVER** use leather or upholstery cleaners, unless designed for faux leathers. Always spot test on a hidden area such as the back or underside of the product before using.

Pile or looped fabric care

- These are specialist fabrics and require gentle care.
- Avoiding getting piled fabrics wet. Velvet can get water stains.
- Some pile loss is natural.
- The surface of these fabrics can flatten or lift with use.
- Velvet and faux fur have a directional pile, resulting in colour and appearance change if direction and light is different. This is a natural characteristic.
- Velvet can appear creased/ crushed when first unpackaged or with use. Minimise by brushing with a soft brush and smoothing the fabric regularly. For extreme cases, restore the pile using steam, but always consult a professional first.
- We recommend brushing piled or looped fabrics every 1-2 weeks to maintain the appearance and cleanliness of faux fur. Always use a soft brush and avoid harsh brushing.
- Pay particular attention to heavily used areas, such as seat cushions, on faux fur products as the longer pile may matte with standard use if not brushed regularly.
- **DO** rotate cushion positions to allow the pile to recover and avoid matted.
- **DO** spot clean using water only.
- **DO** brush the pile regularly with a soft brush to help prevent the pile matting. Brushing will also remove any dirt and debris caught in the pile.
- **DO** use a vacuum to help remove dirt and debris from within the pile.
- **DO** always brush following the direction of the pile.
- **DO** allow to air dry naturally.
- **DO NOT** brush boucle fabric as this may pull the looped yarns causing damage.
- **DO NOT** rub or use heat to dry piled fabrics as this can matte and melt the fibres.
- **DO NOT** use household fabric conditioners or harsh chemicals as this can damage or matte the pile.

Customer service.

If you have any issues with this product, you can call our Customer Service team on: **0345 165 6565** Monday to Friday **9am to 5:00pm.**

Alternatively, you can contact our team by Live Chat on: **Dunelm.com**
Monday to Friday 8am – 8:30am
Saturdays 8am – 5:30pm
Sundays and bank holidays 9am – 4:30pm.

www.dunelm.com

Dunelm (Soft Furnishings) Ltd. LE7 1AD & Dunelm (Soft Furnishings) Holdings Ltd. Dublin D12 WR25.

Manufactured in China