ASSEMBLY & PRODUCT CARE

WARDROBE 2 DOORS 1 DRAWER

5056693579472

Thank you for purchasing this PRODUCT. Please read the instructions carefully before use to ensure safe and satisfactory operation of this product.

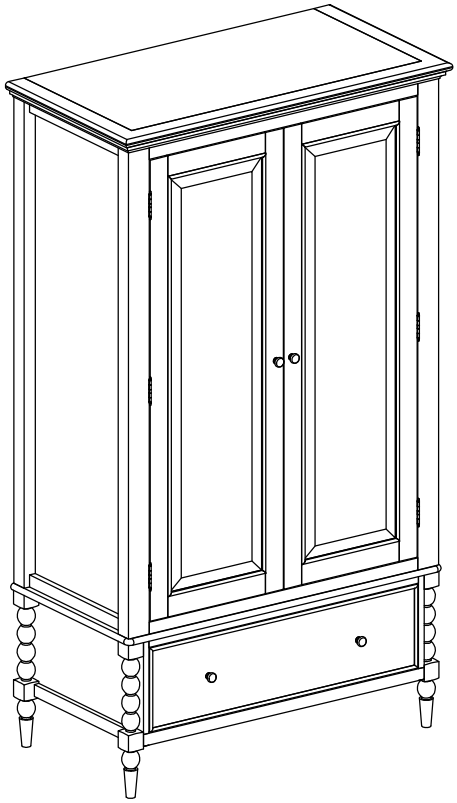

Pre-assembly preparation

Please ensure instructions are read in full before attempting to assemble this product

Necessary Tools

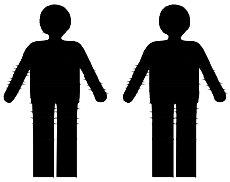

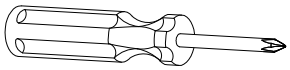

Screwdriver (not included)

Please check the pack contents before attempting to assemble this product. A full checklist of components is given in this leaflet. If any components are missing, please contact the retailer from whom you bought this product.

This product is **HEAVY** , it should be assembled as near as possible to the point of use. **TAKE CARE WHEN LIFTING** to avoid personal injury and (or) damage to the product.

This product takes approximately **40 MINUTES** to assemble with **2 PEOPLE**

The fittings pack contains **SMALL ITEMS** which should be **KEPT AWAY FROM YOUNG CHILDREN**.

Read this leaflet in full before commencing assembly.

IMPORTANT: PUT ALL SCREWS INTO PLACE BEFORE TIGHTENING EACH ONE GRADUALLY IN SEQUENCE. THIS IS IMPORTANT TO ENSURE THAT ALL THE BOLTS LINE UP CORRECTLY TO START WITH.

Fittings and parts checklist

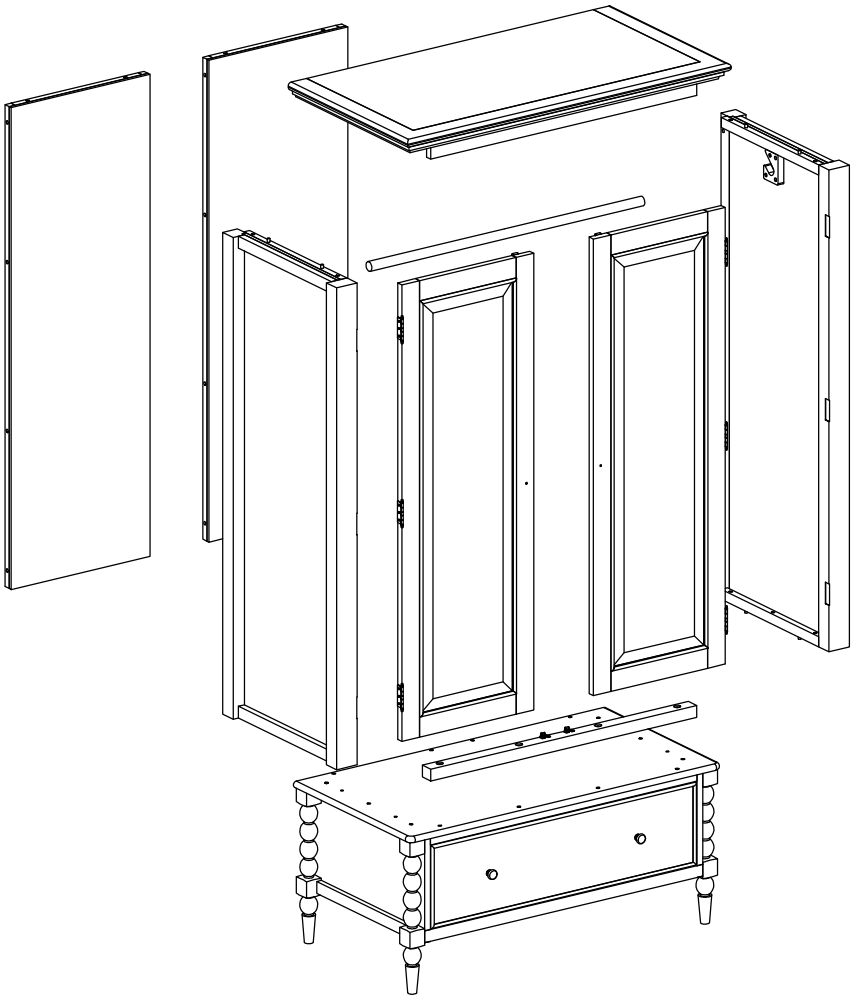

Part	Description	Qty
1	Top Panel	1
2	Left Side	1
3	Right Side	1
4	Back Panel	2
5	Hanger	1
6	Frame	1
7	Storage	1
8	Door	2

Fxing	Description	Size	Image	Qty
A	Screw	Ø3.5x20 mm		18
B	Knob			2
C	Bolt	M4x25 mm		2
D	Bolt	M6x35 mm		38
E	Bolt Cap	M6		6
F	Spring Washer	Ø9x13 mm		38
G	Flat Washer	Ø6x13 mm		38
H	Allen Key	4x110 mm		2
I	Wood splint	3x40x40 mm	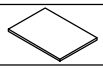	2

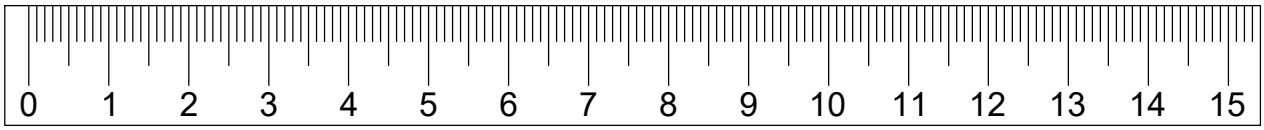

IMPORTANT: PUT ALL SCREWS INTO PLACE BEFORE TIGHTENING EACH ONE GRADUALLY IN SEQUENCE.
THIS IS IMPORTANT TO ENSURE THAT ALL THE BOLTS LINE UP CORRECTLY TO START WITH.

Step by step assembly instructions

Step One

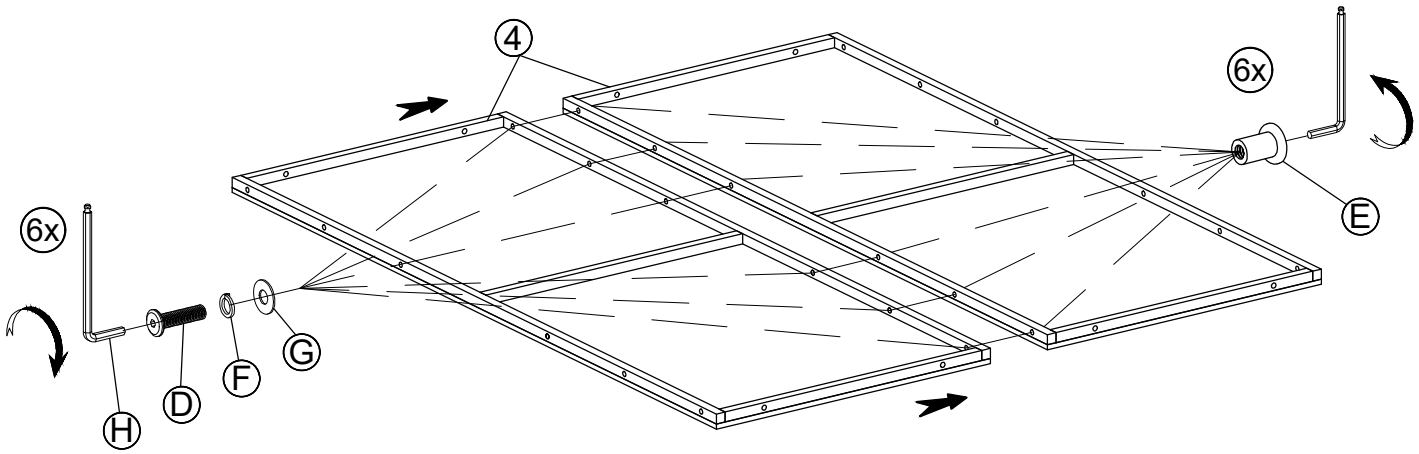

Step Two

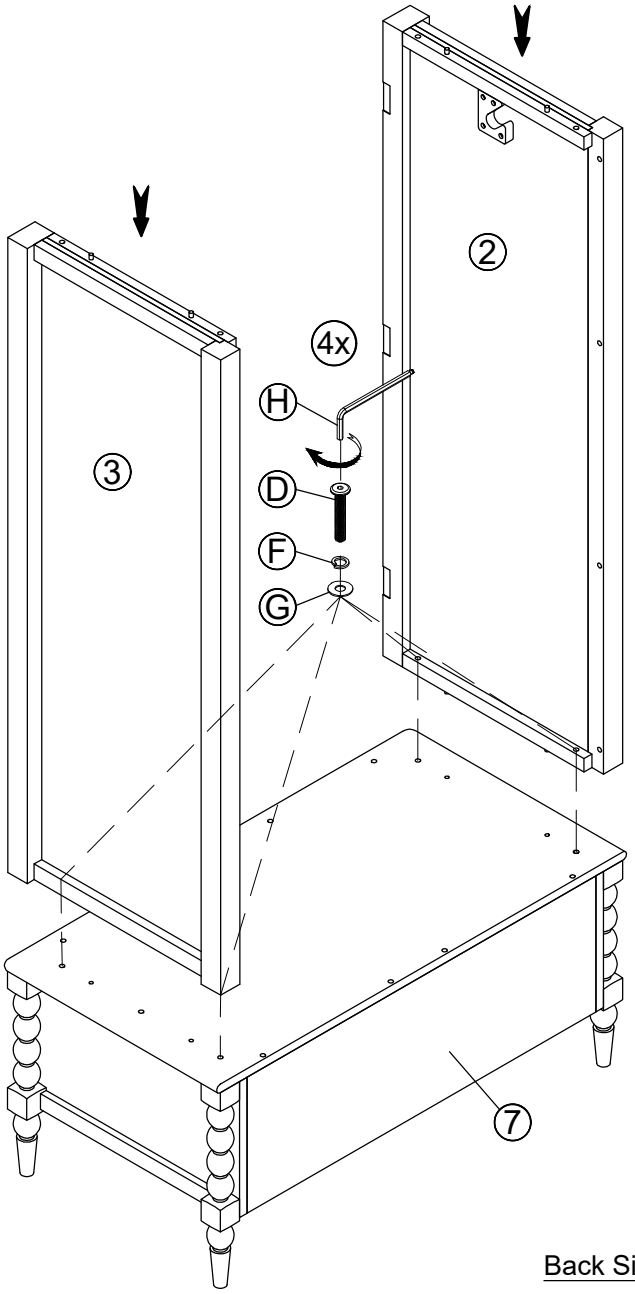

Back Side

Step Three

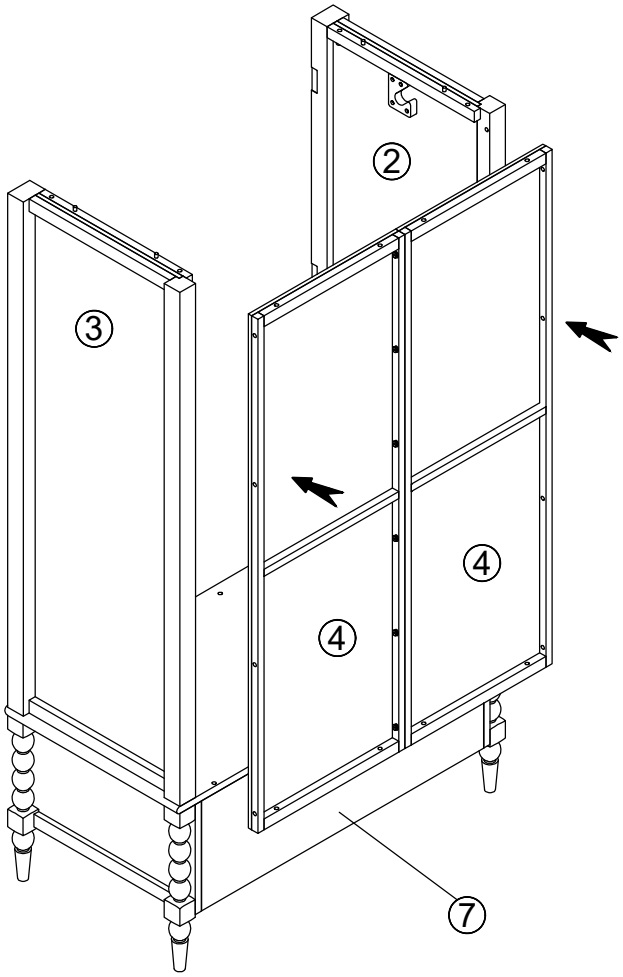

Back Side

IMPORTANT: PUT ALL SCREWS INTO PLACE BEFORE TIGHTENING EACH ONE GRADUALLY IN SEQUENCE.
THIS IS IMPORTANT TO ENSURE THAT ALL THE BOLTS LINE UP CORRECTLY TO START WITH.

Step by step assembly instructions

Step Four

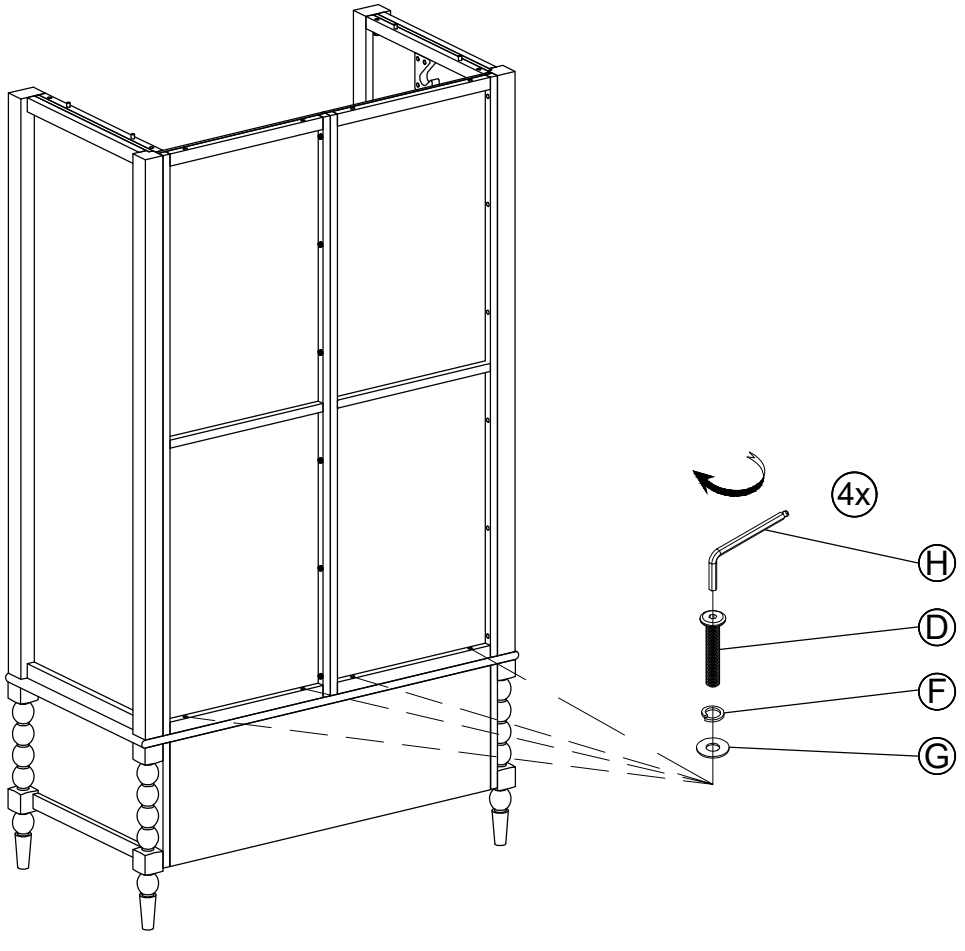

Step Five

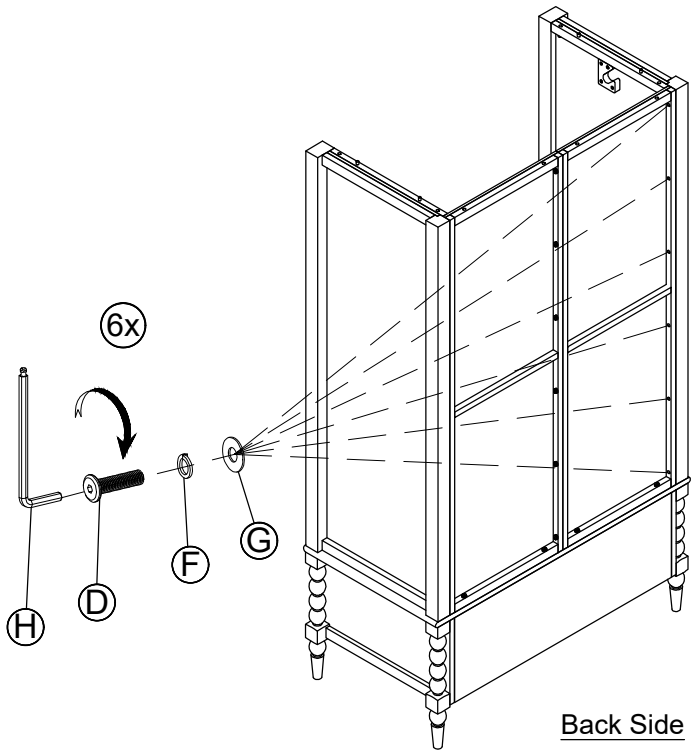

Step Six

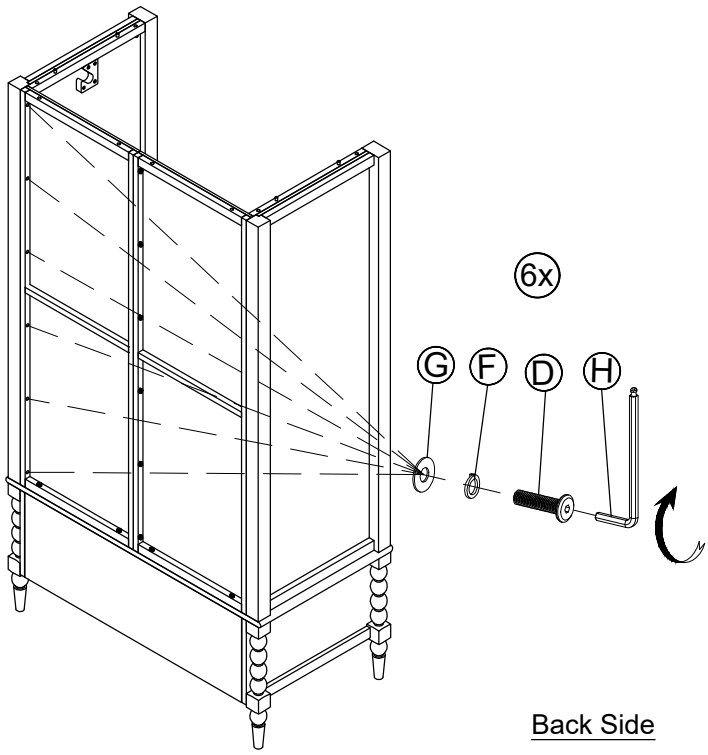

IMPORTANT: PUT ALL SCREWS INTO PLACE BEFORE TIGHTENING EACH ONE GRADUALLY IN SEQUENCE.
THIS IS IMPORTANT TO ENSURE THAT ALL THE BOLTS LINE UP CORRECTLY TO START WITH.

Step by step assembly instructions

Step Seven

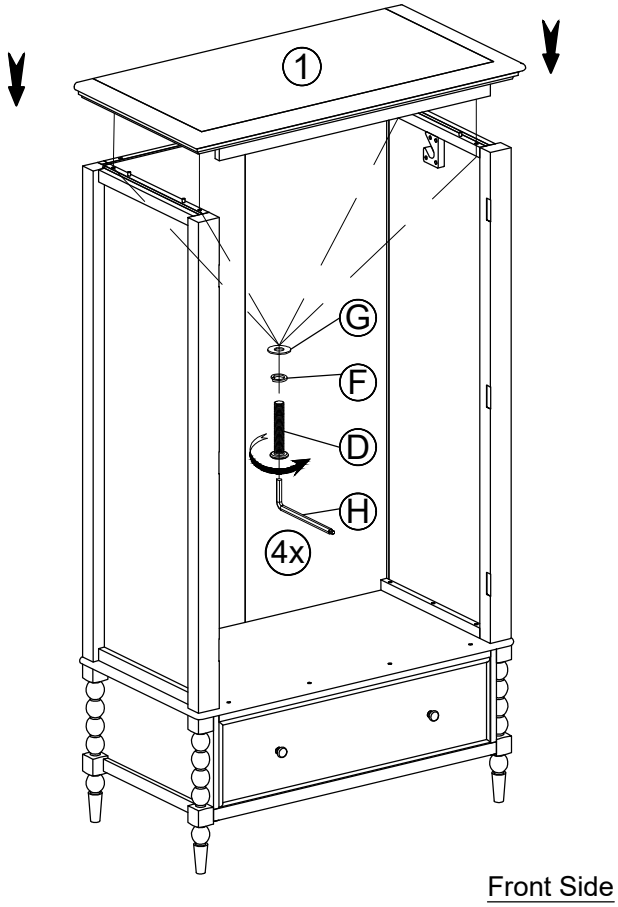

Step Eight

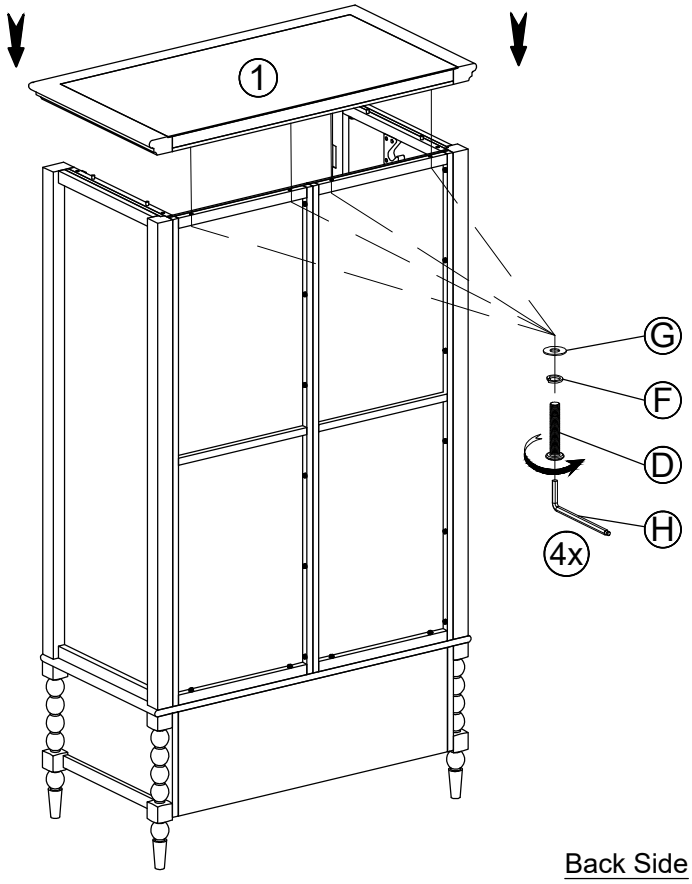

Step Nine

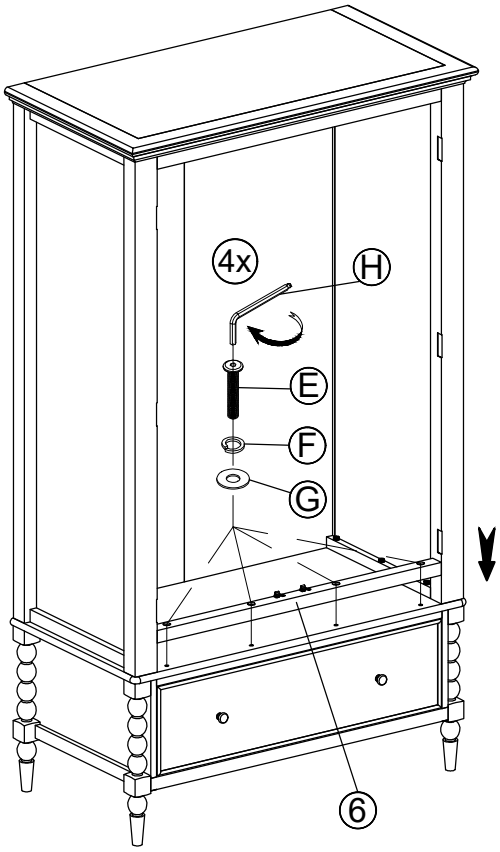

IMPORTANT: PUT ALL SCREWS INTO PLACE BEFORE TIGHTENING EACH ONE GRADUALLY IN SEQUENCE.
THIS IS IMPORTANT TO ENSURE THAT ALL THE BOLTS LINE UP CORRECTLY TO START WITH.

Step by step assembly instructions

Step Ten

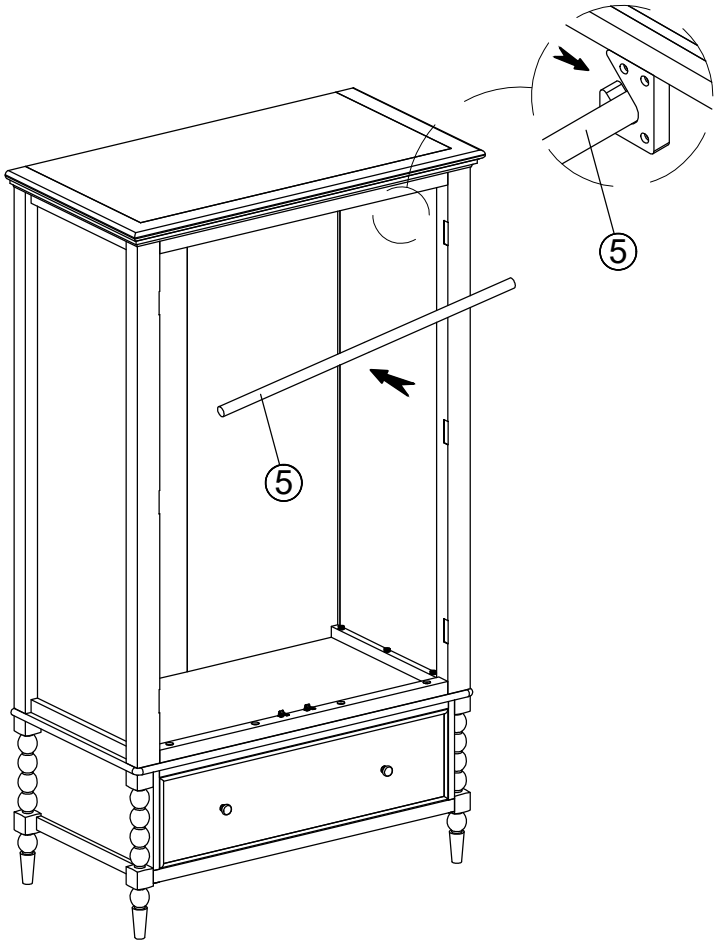

Step Eleven

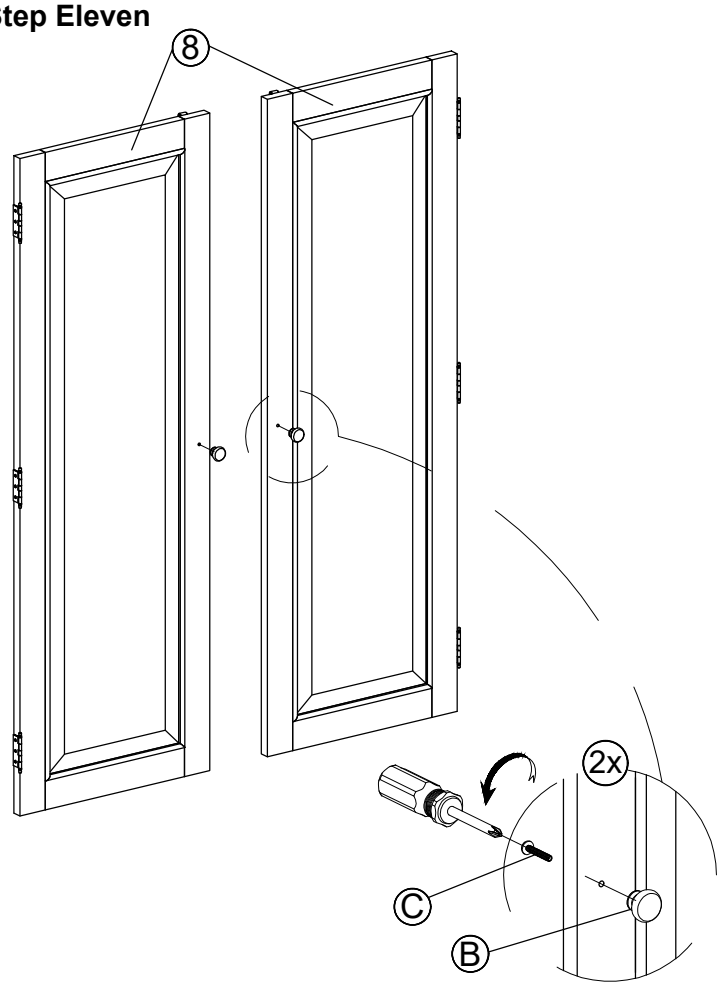

Step Twelve

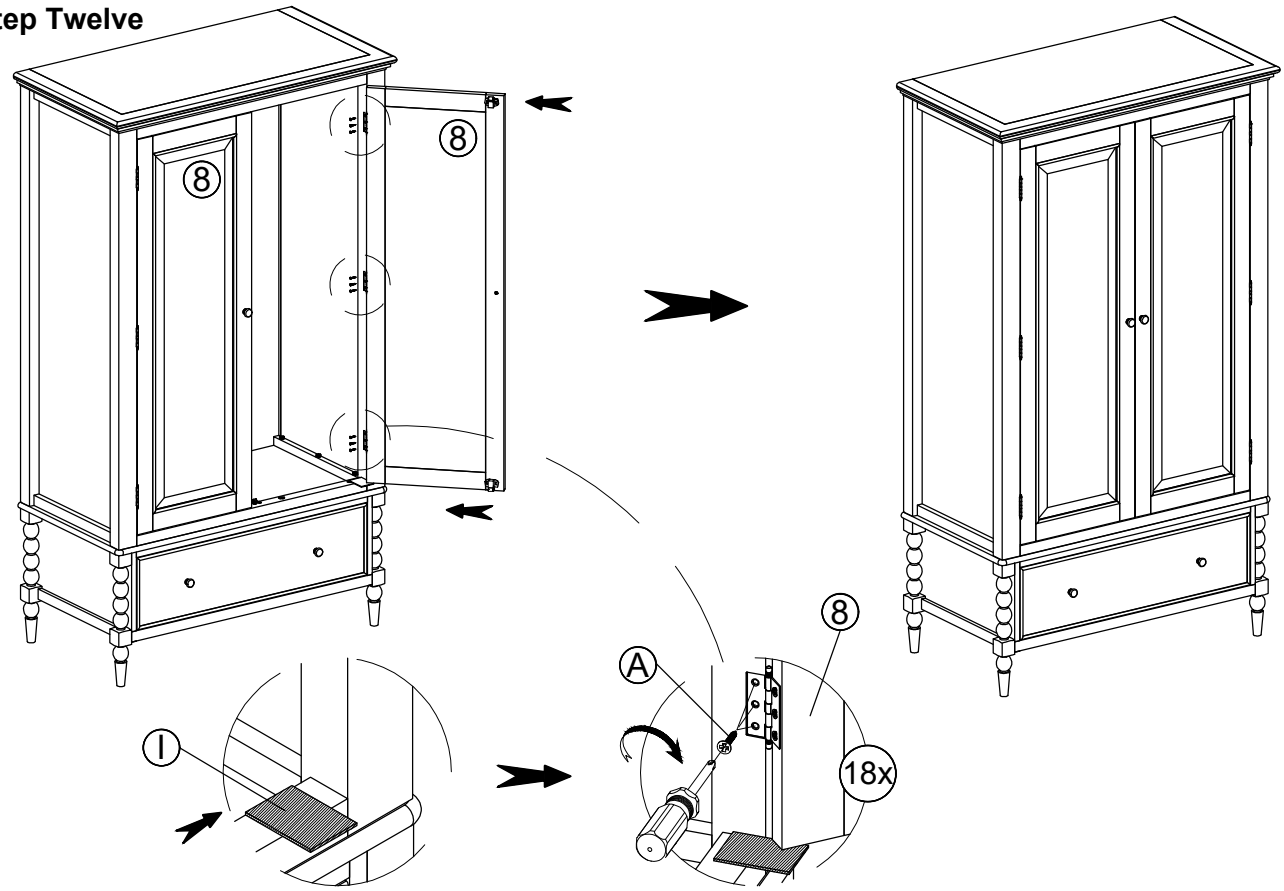

Finish.

Note: Put Wood Splint (I) to Lift door (8) when Using Screwdriver secure ball Bearing Hinge

IMPORTANT: PUT ALL SCREWS INTO PLACE BEFORE TIGHTENING EACH ONE GRADUALLY IN SEQUENCE.
THIS IS IMPORTANT TO ENSURE THAT ALL THE BOLTS LINE UP CORRECTLY TO START WITH.

Step by step assembly instructions

Step Thirteen

Secure the console to the wall using the anti-topple kit provided, following the instructions detailed below. When fitted properly, the device will not be visible during general product use. The anti topple kit may be in the style of either shown below

IMPORTANT: Securing your furniture to the wall with this kit will prevent injury/property damage from unexpected tipping of furniture, particularly to avoid serious injury to children.

IMPORTANT: The device must be fitted to this product in accordance with the following parts: 1 x metal cable tie, 1 x metal wall bracket.

IMPORTANT: Fittings into the wall are not included. You will need to choose screws/fittings which are appropriate for securing the device to the type of walls you have. If you are unsure what wall fixing you require, please seek professional advice. The anti-topple device must not be modified or altered in any way.

Type 1 - Pre fitted metal tab

1. Position your furniture in desired location in your home. Take the metal cable tie and feed through loop hole provided under the wardrobe.
2.Then feed the wall bracket onto the cable tie and press bracket firmly onto the wall flat.

3.Mark with a pencil through the bracket holes onto the wall where the wall fixings will need to be inserted. Temporarily move furniture from wall and prepare necessary screw holes into your wall.

4.Fit the metal wall bracket firmly to your wall using suitable wall fixings. Replace furniture back to your desired position, then attach cable tie through wall bracket and frame firmly. It should look like the below diagram.

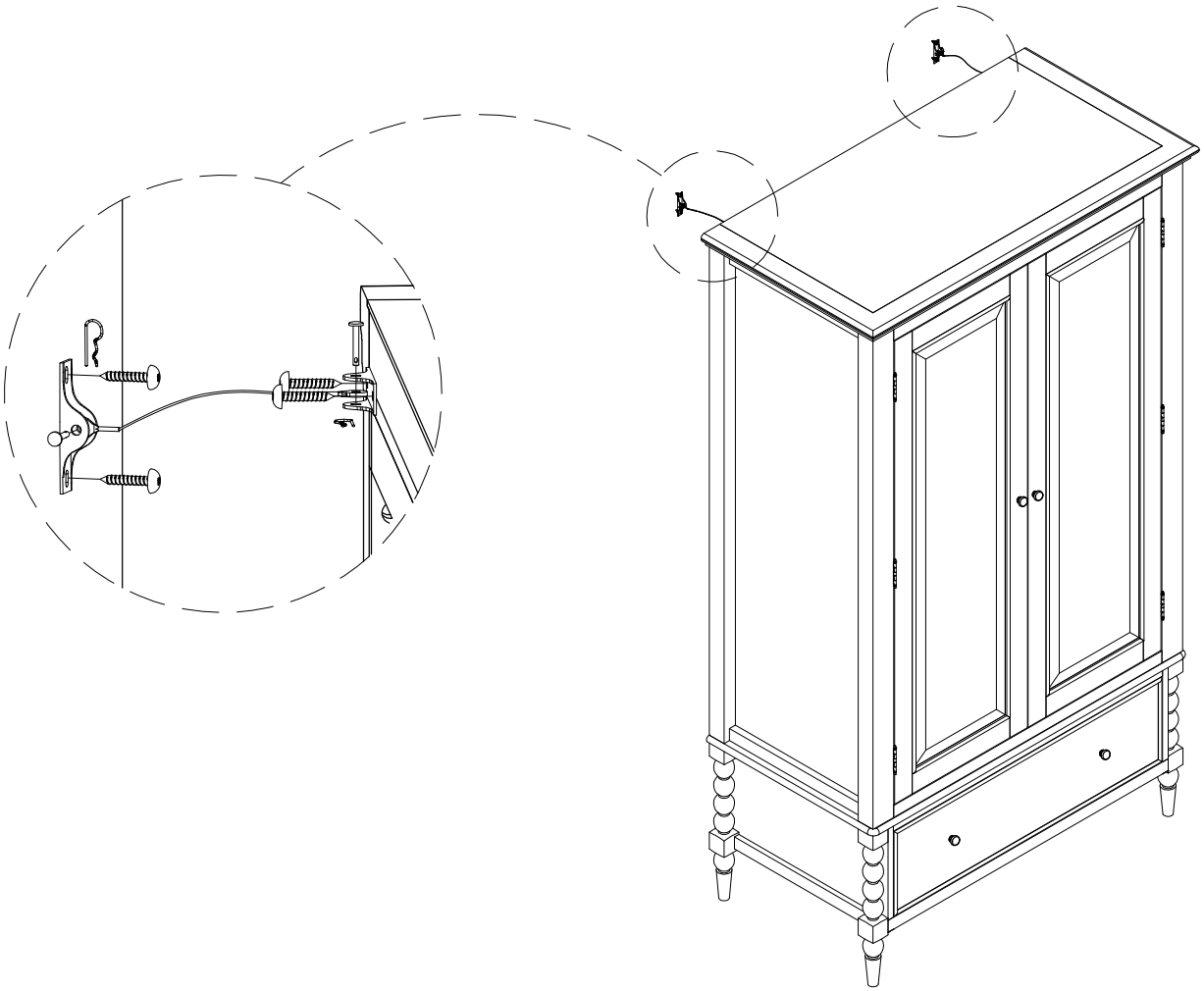

Your furniture is now safe to use in your home.

IMPORTANT: PUT ALL SCREWS INTO PLACE BEFORE TIGHTENING EACH ONE GRADUALLY IN SEQUENCE.
THIS IS IMPORTANT TO ENSURE THAT ALL THE BOLTS LINE UP CORRECTLY TO START WITH.

Step by step assembly instructions

Step Fourteen

Type 2 - Metal bracket - may need to be fitted

IMPORTANT: Installation of the tipping Restraint hardware that is included with this product is recommended to avoid accidental tipping of the furniture which could result from improper use. The hardware is only a deterrent and is not guaranteed to protect against improper use or as a substitute:

- Unless designed to accommodate, do not place a TV or other heavy object on the top of this product.
- Place heaviest objects in lowest drawers.
- Do not allow children to climb or hang on drawers, doors or shelves.
- Do not open more than one drawer at the time.

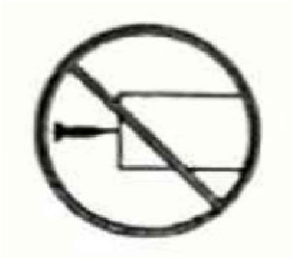

Parts List with illustration:

Do not mount Bracket into edges of particle board or on plywood. Mount Bracket on solid wood only.

1. Bracket ..... 2 pcs.
2. Short screw ..... 2 pcs.
3. Long screw ..... 2 pcs.
4. Pin ..... 2 pcs.
5. Hair pin ..... 2 pcs.
6. Cable ..... 1 pcs.

Fig. (1) Securing Option

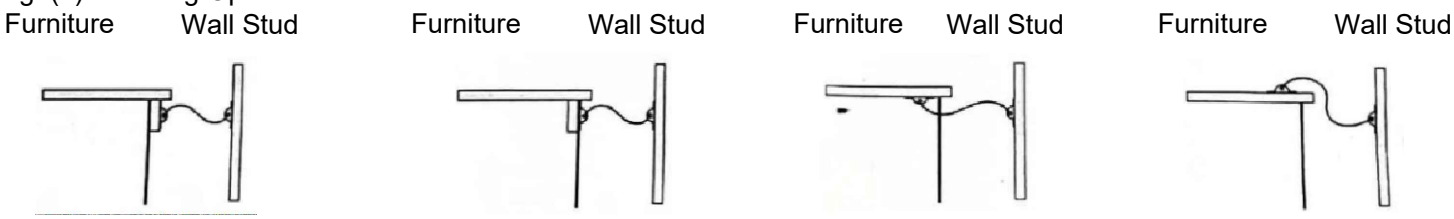

Fig. (2)
Installation diagram

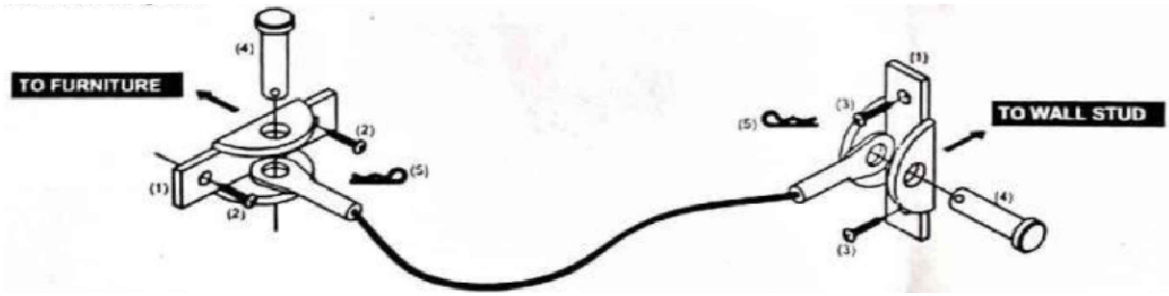

Fig. (3)
Instructions on Hair Pin (5) use

* Push straight leg into hole until engaged as shown

IMPORTANT: PUT ALL SCREWS INTO PLACE BEFORE TIGHTENING EACH ONE GRADUALLY IN SEQUENCE.
THIS IS IMPORTANT TO ENSURE THAT ALL THE BOLTS LINE UP CORRECTLY TO START WITH.

Step by step assembly instructions

Installation Instruction:

Step 1: Tipping restrain **Bracket (1)** must be fastened to a wall stud to be effective. See Securing Options, Fig. (1) to determine the appropriate securing option.

Step 2: Determine the desired position of the furniture in the room. Locate the wall stud behind the furniture in order to determine where **Bracket (1)** should be installed and mark the position, both on the wall and on the furniture. Move furniture away from the wall.

Step 3: Following the example chosen in Fig. (1), attach on **Bracket (1)** horizontally to the furniture using **Short Screw (2**) as shown in the installation diagram, Fig. (2)

Step 4: Attach a second **Bracket (1)** vertically using **Long Screw (3)** to the stub so that lines up with **Bracket (1)** installation on the furniture.

Step 5: Move the furniture to its final position. Line up **Bracket (1)** installed on the wall with **Bracket (1)** installed on the back of the furniture. Fasten **Cable (6)** to each **Braket (1)** using **Pin (4)** and Hair **Pin (5)** as shown in Fig. (2). See Fig. (3) for instruction on use of **Hair Pin (5).**

Step 6: Check to make sure **Bracket (1)** are securely fastened to the wall and to the furniture and that the **Cable (6)** is secure.

This completes the tipping restraint installation.

IMPORTANT: PUT ALL SCREWS INTO PLACE BEFORE TIGHTENING EACH ONE GRADUALLY IN SEQUENCE.
THIS IS IMPORTANT TO ENSURE THAT ALL THE BOLTS LINE UP CORRECTLY TO START WITH.

Safety Instructions

General Information:

• Furniture can be dangerous if incorrectly installed. Assembly should be carried out by a competent person. No liability will be accepted for damage or injury caused by incorrectly installed or assembled furniture.

• Please take care when handling or moving the furniture as careless handling may cause damage or injury.

• **IMPORTANT:** If an Anti-topple device is included with your furniture item you must install it in accordance with the instructions provided using fixings suitable for the wall type. If unsure, please seek advice of a professional.

Moving Furniture:

• Never drag furniture when moving it, always lift it.

• When lifting or moving a table always do so from under frame and not the table top.

• Periodically check all fixings to ensure none have come loose and re-tighten where necessary.

• It is recommended that before moving heavy objects to a new location they are completely dis-assembled to avoid personal injury or damage to the furniture. Please be careful to retain all fittings when doing this.

Load Caution:

• Never overload an item such as a shelf that may be beyond what the shelf is reasonably expected to hold.

• Please do not sit or place an amount of weight onto the edge of a tabletop as this may cause the table to topple.

• Single Chairs/Arm Chairs are designed for sitting one person only. Sit whilst supporting your back only at a resting position. If any parts are missing or damaged, please stop using chair until parts are replaced.

DO NOT USE CHAIRS TO STAND ON
DO NOT ROCK OR TOPPLE CHAIR BACKWARDS OR FORWARDS USING ONLY TWO LEGS

If your furniture requires assembly, put all screws into place before tightening each one gradually in sequence. This is important to ensure that all the bolts line up correctly to start with.

IMPORTANT: PUT ALL SCREWS INTO PLACE BEFORE TIGHTENING EACH ONE GRADUALLY IN SEQUENCE.
THIS IS IMPORTANT TO ENSURE THAT ALL THE BOLTS LINE UP CORRECTLY TO START WITH.

Care and Maintenance

Foam Upholstery Cleaners / Cotton & Linen

- Always read the label of the product you are using if it is compatible to the fabric, consult a professional if unsure
- You should be able to clean most cotton / linen fabrics yourself, but there are always exceptions so it's best to test a discrete area first, again if unsure consult professional upholstery cleaner.
- Vacuum the upholstery to remove any dust, loose dirt, crumbs or pet hair. Remove any leftover pet hair with a sticky roller lint remover. It is important to remove every bit of loose dirt and pet hair to expose the fabric surface to the cleaning agent.
- Spray a small area of your upholstery with foam upholstery cleaner following the product instructions. It is advised to test a discrete area first to ensure that the upholstery cleaner will not damage the fabric. With most upholstery sprays, you spray them on, and take a damp sponge and spread the foam evenly on the fabric. Allow it to dry completely, and then vacuum.

- **Tips & Warnings:**

❖Spot clean any serious stains first and then continue to clean the entire piece of furniture with the upholstery cleaner. Again, follow the foam upholstery cleaner's directions of spraying on, spreading, drying and vacuuming. Stain-resistant finish sprays extend the life of your upholstery. You may want to consider applying a stain-resistant finish to your furniture when it is new. Keep your furniture out of direct sunlight because it will fade the fabric.

❖Extreme amounts of water / moisture are harmful to the fabric and will destroy it by loosening the weave and giving a baggy appearance.

Cleaning Velvets

- Velvet is a very delicate material, which requires special care as it can be easily damaged.
- Velvet is a very luxurious fabric, which isn't easy to maintain. If not properly cleaned, its fabric can be crushed and damaged. Velvet made from synthetic materials is easier for cleaning. Follow the advice and tips presented below to avoid damaging the smooth surface of your velvet upholster.
- Vacuum clean your upholstered furniture with the attachment designed for furniture. Make sure you collect all the loose fiber's (i.e. dust, feathers, hair) from your upholstered furniture, running it back and forth until the excess disappears from your velvet furniture.
- Examine the pile of your velvet upholstery by running your hand from back to front, if its smooth this is the direction of the pile, brush it in this direction using a soft brush. If you want to remove stains from your velvet upholstered furniture, you should make the stain dry by applying a soft clean cloth on it to absorb any liquid. Don't apply too much pressure as this can crush the fibers. Continue removing the stain by making a cleaning solution. For it you will need only a little quantity of warm water and some drops of dish-wash detergent. Stir and shake this solution until suds occur. Apply the suds ONLY onto the stain carefully. You can also use a dry cleaning product to remove the stain (any good hardware store, read the manufacturer's instructions carefully!). After you clean the stain, let it dry well and brush it in the same direction as the pile until the velvet returns to its normal appearance.
- A steam cleaner is perfect for removing stains, dirt and debris, disinfecting the velvet fabric, without leaving any damage to it. This process is best performed by a professional.

How to care for Leather & Faux Leathers

- Always use reputable leather cleaning products and follow the manufacturer's recommended instructions. Regular wiping with a damp, soft cloth is often enough to keep a leather sofa looking pristine.
- Vacuum your leather sofa regularly, to remove dust and dirt, especially along the stitch lines.
- Keeping your leather seating at least 50cm from a heat source will help to avoid the leather cracking.
- Spilt liquid should be blotted immediately with a dry cloth or kitchen paper until it is dry, do not rub the area as this could cause discoloration or damage to the finish.
- Avoid overexposing your furniture to sunlight, it will help to prevent colour fading.
- Beware of sharp objects that could tear, cut, or scratch leather.

How to care for Wood

- Furniture with a hard lacquer, wax polish or painted surface should be dusted with a dry cloth.
- Waxed furniture will need to be given a coat of beeswax a couple of times a year to help maintain its lustre.
- Spray polishes are best avoided as they contain silicones which may spoil the furniture's surface by building up over time.

IMPORTANT: PUT ALL SCREWS INTO PLACE BEFORE TIGHTENING EACH ONE GRADUALLY IN SEQUENCE.
THIS IS IMPORTANT TO ENSURE THAT ALL THE BOLTS LINE UP CORRECTLY TO START WITH.

Care and Maintenance

- Make sure all surfaces are protected from heat and liquids by mats and coasters. Wipe up spills immediately and ensure that a mat or pad is placed under paper if you are writing. Do not leave liquids to settle on the surface as this will damage the finish.
- Extendable dining tables should be left extended for the first few months to avoid an uneven appearance. Likewise, lamps and ornaments should also be moved regularly.
- Furniture will endure most temperatures in the home but it is best to avoid placing furniture next to heat sources such as radiators or fires. Be particularly careful with solid wood as the lack of humidity caused by central heating can cause damage such as warping.
- Wooden furniture should be protected from direct intense sunlight and exposure to magnification heat from large glass windows and doors. These conditions can cause premature warping and potential splitting to occur in timbers.

How to care for Painted Wood finishes - additional information

- Hand painted brush stroke finish's will hold up to everyday wear and tear quite nicely. However, it is important to remember that your piece is still a wood piece of furniture and should be cared for as such.
- Painted furniture still requires regular dusting with a damp cloth. When very soiled wash with a solution of mild, non-abrasive detergent and warm water. Wring a cloth nearly dry and work on a small section at a time, then rinse with clear water and dry after.
- Never leave water to settle on the surface as this will cause damage. Any liquid spilled onto the item should be cleaned up immediately using an absorbent cloth.
- AVOID chemical cleaners or liquid furniture polish including direct contact with greasy substances
- As with all natural wood products, there will be some movement within the parts as the furniture acclimatises to its surroundings, you may see slight chipping and cracks where panels meet, this is a completely natural occurrence with ALL painted products using natural solid timbers.
- Painted surfaces can be carefully touched up with matching paint. There will be various brush lines, slubs, and little inconsistencies in the painted finish, this is all part of the relaxed hand finished look and feel of hand painted collections.

How to care for Glass furniture

- Never use sharp items on the surface of the product. For example knives and utensils may damage the product. It is also advisable to place a mat under paper when writing.
- If the product component is chipped or broken, please consult the manufacturer, retailer or agent with regard to obtaining a manufacturing specification and shape for replacement glass quoting the model number and batch number.
- Do not use the glass as a chopping surface. Do not strike the glass with hard or pointed objects.
- Do not sit or stand on horizontal glass surfaces.
- Do not place very hot or very cold items against or in close proximity to a glass surface.
- The surface should be protected with coasters, trivets or placemats.
- All spills should be blotted up immediately. Do not wipe the spill or this may spread it. Clean the surface with a clean soft cloth (non-abrasive) and mild detergent or stone soap.

How to care for Marble furniture

- Marble comes in many variations with its creation being natural thousands of years ago. Every piece of marble will have its own structure with random grain patterns, irregular markings, mottling or vein streaks including small fissures or pinholes. These are all natural geological features.
- Never use sharp items on the surface of the product. For example knives and utensils may damage the product. It is also advisable to place a mat under paper when writing.
- The surface should be protected with coasters, trivets or placemats.
- All spills should be blotted up immediately, do not wipe the spill as this may make it spread.
- Clean the surface with a clean soft cloth (non-abrasive) and mild detergent or stone soap. Do not use cleaners containing acids.It is recommended a generous layer of marble wax is applied at regular intervals to maintain and protect the finish. This should especially be applied after cleaning once the finish is dry. For food surfaces such as kitchen islands please ensure you use a food safe marble wax. Details on these can be found on the wax packaging or from the manufacturer.

IMPORTANT: PUT ALL SCREWS INTO PLACE BEFORE TIGHTENING EACH ONE GRADUALLY IN SEQUENCE.
THIS IS IMPORTANT TO ENSURE THAT ALL THE BOLTS LINE UP CORRECTLY TO START WITH.

Care and Maintenance

How to care for GRC (Glass Reinforced Concrete)

- DO NOT use any acid cleaners on your Concrete/ GRC furniture
- All normal non-abrasive household or institutional cleaners are acceptable, however if the cleaner has never been used before, it is advisable to pick a small area on a non visible part of your item and test the cleaner for discoloration before wide spread use. We recommend a solution of 4 parts water to 1 part white vinegar or All-Purpose Cleaner for daily cleaning of your concrete furniture.
- DO NOT place any hot objects directly onto the surface of your Concrete / GRC furniture - always use a table mat or trivets to ensure no damage from high heat.
- Use a cutting board. Knives will pierce the sealer, rendering the surface more susceptible to staining. Additionally the concrete will severely dull the knife's cutting edge. Scratches in the sealer may occur if heavy, rough or sharp objects are dragged across the concrete table top surface. Should a scratch occur, it could be repaired and/or minimized with a touch-up of a concrete sealer available in a most hardware stores.
- Non-structural hairline cracks are possible and are considered an inherent part of the product, not a manufacturing defect. Hairline cracks can occur at any time during the life of the furniture, but are not a common occurrence. Hairline cracks do not threaten the integrity or stability of the item nor prevent the continued and normal use. If a hairline crack should appear in your concrete item, it can be repaired in the same manner as a scratch.
- Your item is seales and resistant to a wide variety of substances. Spills should be cleaned immediatly as stone and concrete are acid sensitive. It is important to wipe up spills from acidic substances (for example citrus juice immediately, before acid etching occurs.
- To prolong the finish and longevity of your item, placement in a location with shade or under a parosol is preferable. Covering during the harsher times of year will reduce damage and weathering.

How to care for Metal furniture

- Metal furniture requires minimal maintenance:
- Cleaning your metal furniture is very simple. Use a soft cotton cloth and clean with mild detergent or water, using a towel immediately dry the furniture afterwards.
- Metal furniture is usually damaged due to rust, as a precaution a soft wax after cleaning will help seal it.
- If it has a few spots of rust, you can treat it with rust remover, following the manufacturers guidelines. (some finishes are made to look like rust)
- Smudges and smears can be removed from metal furniture by using a window cleaner and a paper towel.
- Indoor metal furniture is not recommended for outdoor use.

How To Care For Paper Wicker and Paper Rush Product

- Since these seats are made from the same authentic paper fibre material that was used in a great deal of Wicker Furniture manufactured since 1904, the cleaning treatments are the same for both paper wicker and paper rush.
- Vacuum frequently, use a damp cloth to clean stubborn dirt, and a slightly wet toothbrush to get into tight corners**. In case of accidental spillage, your best option is to act quickly!** Immediately after spilling, first try use a paper towel and press firmly (not wipe) to soak up as much moisture as possible. If a colour stain remains, try a 'damp' cloth to soak up the stain. If this does not remove the colour stain, try gently 'wipe' the area with a damp sponge.
- **IMPORTANT:** Do not soak or immerse the seat in water. Try avoid excessive 'wiping' as this can damage the surface fibres of the paper. Never use harsh soaps or cleaning liquids on the paper cord seat as they can damage the material.

How to care for Outdoor Furniture

- The frame of the furniture is all-weather proof. However, although cushions are water resistant only. These are not suitable to be left out in a rain shower or heavy / prolonged rain as this will damage and stain them due to the fire resistant materials used. They are suitable to be left out overnight if there is to be no rain. Cushions should not be left outside continuously and you will need to store your cushions away when not in use to keep them at their best. They can be sponge cleaned with a gentle detergent. Avoid machine washing as this may affect the Fire Retardant coating. Before storage ensure cushions and upholstery are dry fully to avoid mould and mildew.

IMPORTANT: PUT ALL SCREWS INTO PLACE BEFORE TIGHTENING EACH ONE GRADUALLY IN SEQUENCE.
THIS IS IMPORTANT TO ENSURE THAT ALL THE BOLTS LINE UP CORRECTLY TO START WITH.

Care and Maintenance

- We recommend using a parasol over dining sets on sunny days to protect from direct sunlight. In Windy conditions don't forget to store your furniture away especially a parasol.
- We recommend during winter months all garden sets are covered or stored in an out building. Cushions should always be stored inside as previously described.
- Never use sharp items on the surface of the product. For example knives and utensils may damage the product. It is also advisable to place a mat under paper when writing.
- Metal Furniture designed for outdoor use will age naturally due to the additional elements found in an exterior environment.
- It is quite normal for cast and wrought iron products to develop surface rust and this aged appearance of the metal is to be expected. The rust will not affect the integrity of the product but adds a rustic patina finish to the items. Most of our iron products are supplied to naturally age in this way.
- Metal products will age quicker when in close vicinity to the coast due to the increase of salt in the atmosphere.
- Steel and aluminium products will dull and corrode over time, again depending on placement and exposure to the elements. .
- Some planters and furniture will have distressing, antiquing or faux rust already applied and this is a unique feature to depict a pre aged appearance.
- Be mindful when placing some products designed to rust as part of their feature as they could leave tarnishing when hung on a wall or placed on the ground.
- Metal furniture requires minimal cleaning and maintenance:
    - Use a soft cotton cloth and clean with mild detergent or water.
    - Specific metal cleaning products are available from hardware stores.
    - Smudges and smears can be removed from metal furniture by using a window cleaner and a paper towel.
    - Indoor metal furniture is not recommended for outdoor use.

PLEASE KEEP THESE INSTRUCTIONS FOR FUTURE REFERENCE

IMPORTANT: PUT ALL SCREWS INTO PLACE BEFORE TIGHTENING EACH ONE GRADUALLY IN SEQUENCE.
THIS IS IMPORTANT TO ENSURE THAT ALL THE BOLTS LINE UP CORRECTLY TO START WITH.