ASSEMBLY & PRODUCT CARE

1 DRAWER SIDE TABLE
5056693595915

Thank you for purchasing this PRODUCT. Please read the instructions carefully before use to ensure safe and satisfactory operation of this product.

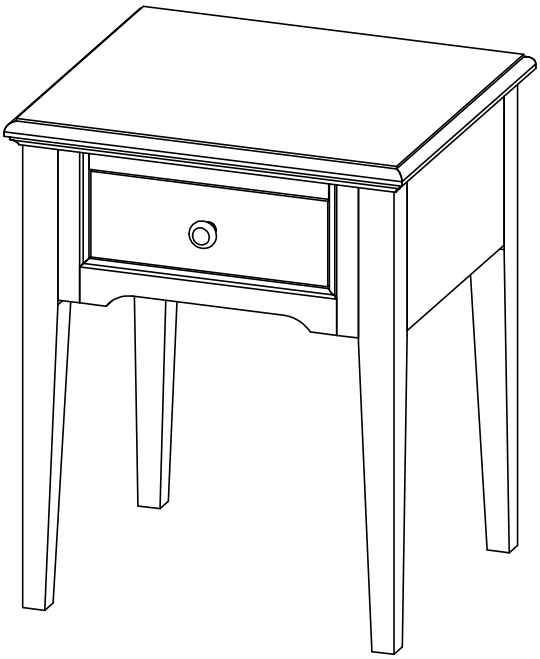

Pre-assembly preparation

Please ensure instructions are read in full before attempting to assemble this product

Necessary Tools

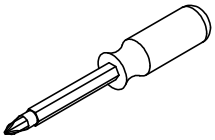

(Not included)

Please check the pack contents before attempting to assemble this product. A full checklist of components is given in this leaflet. If any components are missing, please contact the retailer from whom you bought this product.

This product is **HEAVY**, it should be assembled as near as possible to the point of use **TAKE CARE WHEN LIFTING** to avoid personal injury and (or) damage to the product.

This product takes approximately 10 **MINUTES** to assemble with 1 **PERSON.**

The fittings pack contains **SMALL ITEMS** which should be **KEPT AWAY FROM YOUNG CHILDREN**.

IMPORTANT: PUT ALL SCREWS INTO PLACE BEFORE TIGHTENING EACH ONE GRADUALLY IN SEQUENCE. THIS IS IMPORTANT TO ENSURE THAT ALL THE BOLTS LINE UP CORRECTLY TO START WITH

Parts checklist

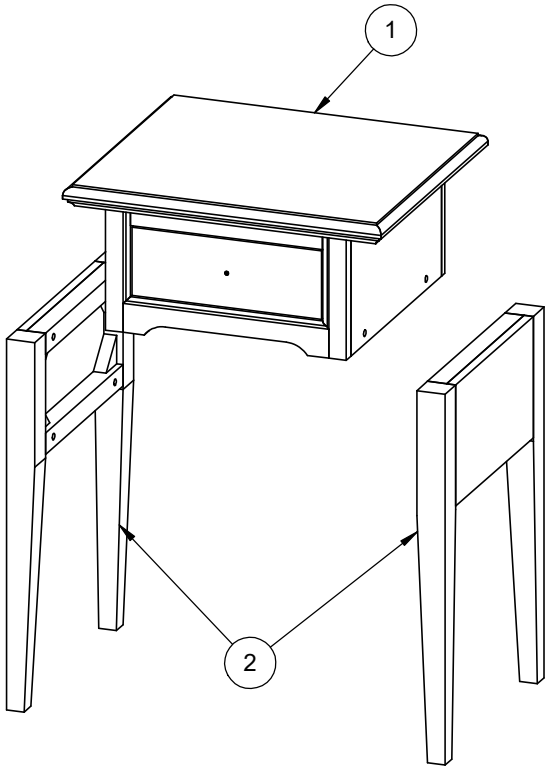

1. Barrel x 1
2. Leg x 2pcs

Fittings checklist

A

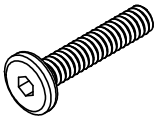

M6x30
Allen key bolt x 8pcs

B

Ø6x14
Flat washer x 8pcs

C

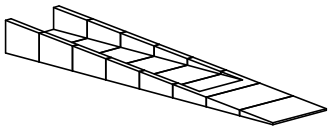

Plastic wedge x 2pcs

D

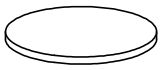

Felt Ø20 x 4pcs

E

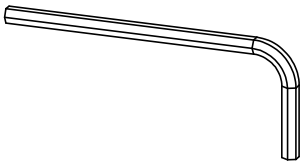

4mm
Allen key x 1pc

Step by step assembly instructions

Step One:

Open the drawer, attach two the legs (2) to the barrel (1) using bolt (A) flat washer (B) and allen key (E) to clockwise as shown in figure.

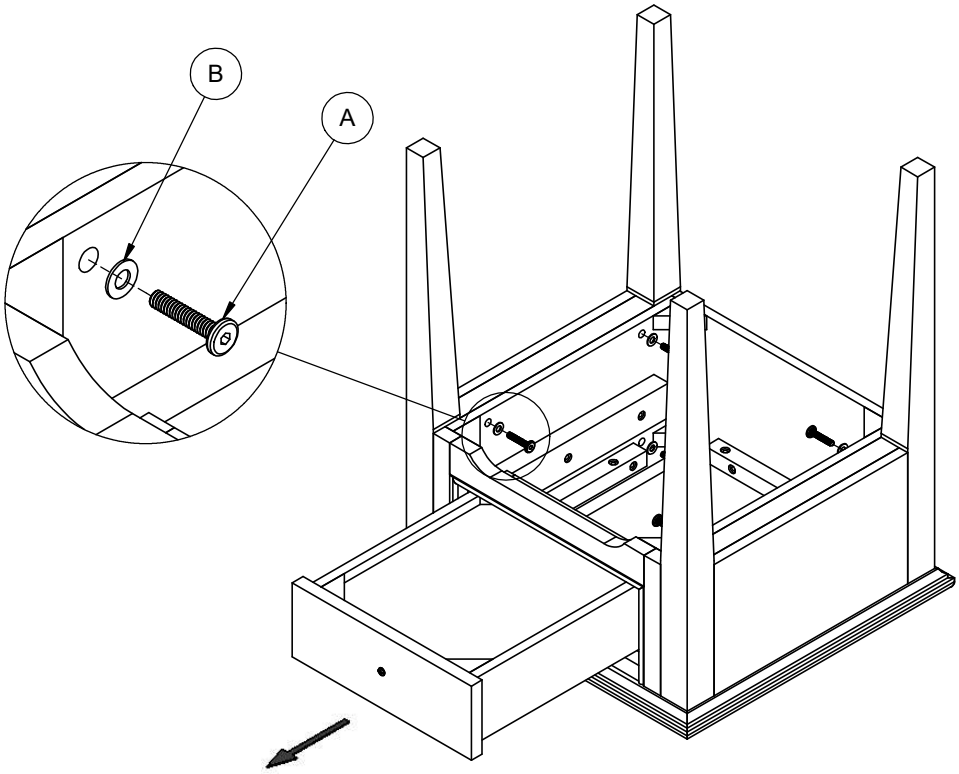

Step Two:

Glue the foot felt (D) to the two legs (2)

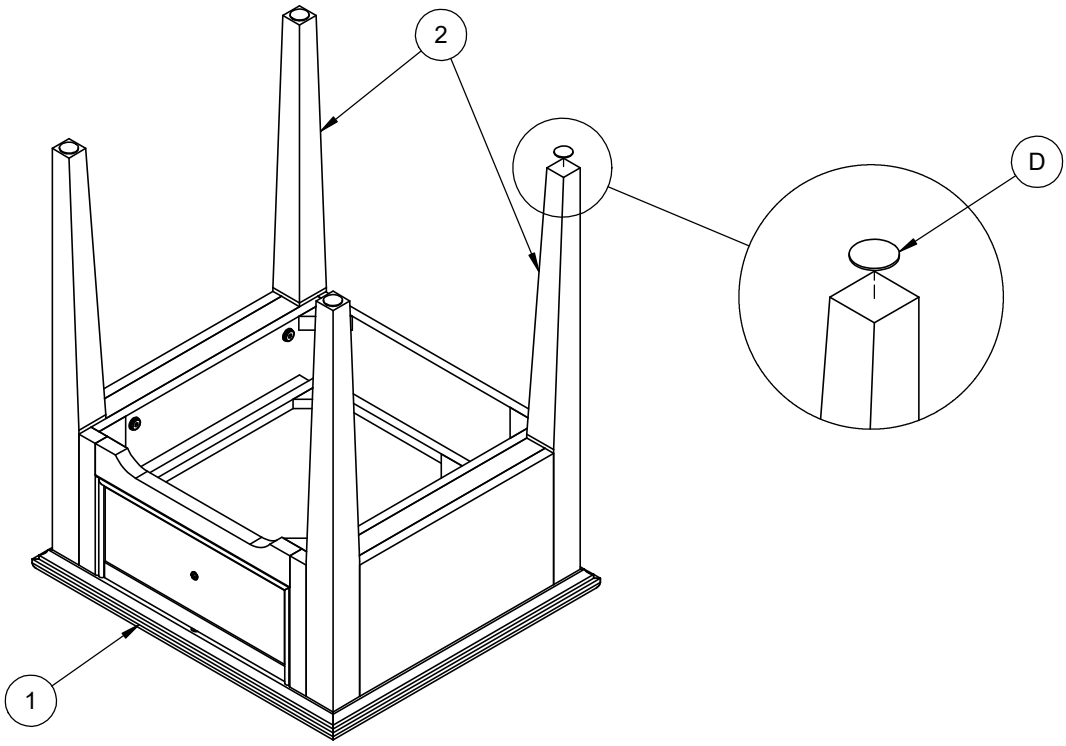

Step by step assembly instructions

Step Three:

Open the drawer, use a screwdriver to open handle. Turn the screwdriver counterclockwise as shown in figure.

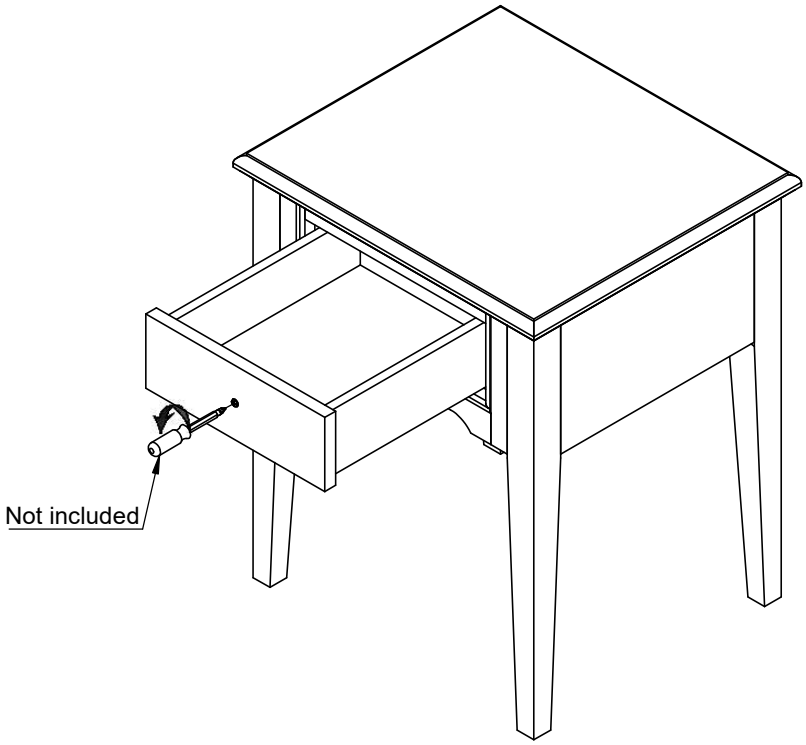

Step Four:

Attach handle to drawer front.

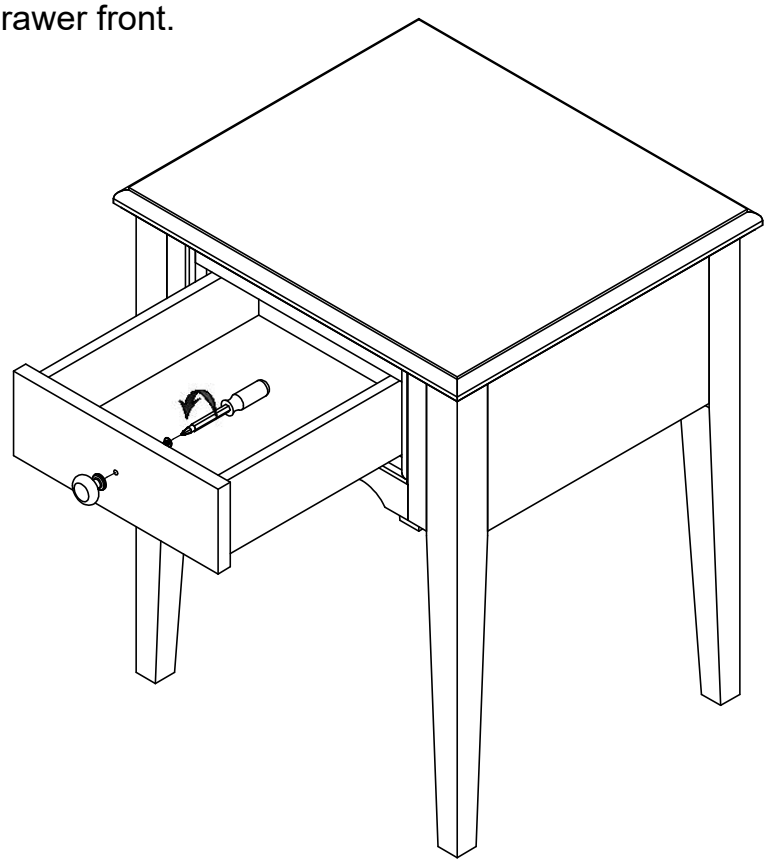

Step by step assembly instructions

Step Five:

Wedge instruction.

To ensure the unit is level on the floor please use plastic wedge provide

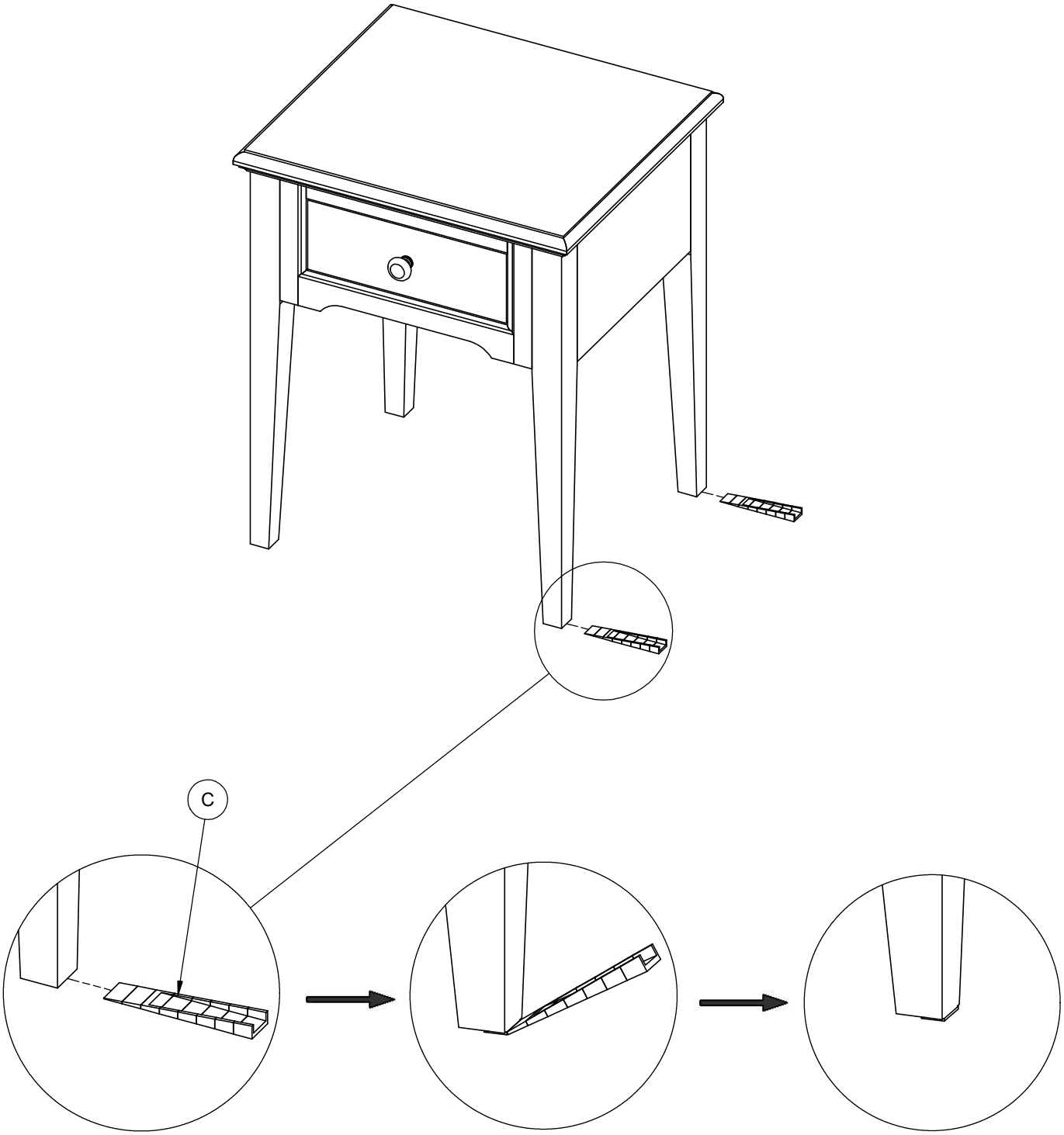

Safety Instructions

General Information

- Furniture can be dangerous if incorrectly installed. Assembly should be carried out by a competent person. No liability will be accepted for damage or injury caused by incorrectly insalled or assembled furniture.
- Please take care when handling or moving the furniture as careless handling may cause damage or injury.
- **IMPORTANT:** If an Anti-topple device is included with your furniture item you must install it in accordance with the instructions provided using fixings suitable for the wall type. If unsure, please seek advice of a professional.

Moving Furniture

- Never drag furniture when moving it, always lift it.
- When lifting or moving a table always do so from under frame and not the table top.
- Periodically check all fixings to ensure none have come loose and re-tighten where necessary.
- It is recommended that before moving heavy objects to a new location they are completely dis-assembled to avoid personal injury or damage to the furniture. Please be careful to retain all fittings when doing this.

Load Caution

- Never overload an item such as a shelf that may be beyond what the shelf is reasonably expected to hold.
- Please do not sit or place an amount of weight onto the edge of a tabletop as this may cause the table to topple.
- Single Chairs/Arm Chairs are designed for sitting one person only. Sit whilst supporting your back only at a resting position. If any parts are missing or damaged, please stop using chair until parts are replaced.

DO NOT USE CHAIRS TO STAND ON

DO NOT ROCK OR TOPPLE CHAIR BACKWARDS OR FORWARDS USING ONLY TWO LEGS

If your furniture requires assembly, loosley fit all screws or bolts into place before tightening each one gradually in sequence. This is important to ensure that all the screws and bolts line up correctly.

Care and Maintenance

Foam Upholstery Cleaners / Cotton & Linen

- Always read the label of the product you are using to check if it is compatible to the fabric, consult a professional if unsure.
- You should be able to clean most cotton / linen fabrics yourself, but there are always exceptions so it's best to test a discrete area first, again if unsure consult a professional upholstery cleaner.
- Vacuum the upholstery to remove any dust, loose dirt, crumbs or pet hair. Remove any leftover pet hair with a sticky roller or lint remover. It is important to remove every bit of loose dirt and pet hair to expose the fabric surface to the cleaning agent.
- Spray a small area of your upholstery with foam upholstery cleaner following the product instructions. With most upholstery sprays, you spray them on, and take a damp sponge and spread the foam evenly on the fabric. Allow it to dry completely, and then vacuum.

- Tips & Warnings:
    - ❖ Spot clean any serious stains first and then continue to clean the entire piece of furniture with the upholstery cleaner. Again, follow the foam upholstery cleaner's directions of spraying on, spreading, drying and vacuuming. Stain-resistant finish sprays extend the life of your upholstery. You may want to consider applying a stain-resistant finish to your furniture when it is new. Keep your furniture out of direct sunlight because it will fade the fabric.
    - ❖ Extreme amounts of water / moisture are harmful to the fabric and will destroy it by loosening the weave and create a baggy appearance.

Cleaning Velvets

- Velvet is a very delicate material, which requires special care as it can be easily damaged.
- Velvet is a very luxurious fabric, which isn't easy to maintain. If not properly cleaned, its fabric can be crushed and damaged. Velvet made from synthetic materials is easier for cleaning. Follow the advice and tips presented below to avoid damaging the smooth surface of your velvet upholstery.
- Vacuum clean your upholstered furniture with the attachment designed for furniture. Make sure you collect all the loose fiber's (i.e. dust, feathers, hair) from your upholstered furniture, running it back and forth until the excess disappears from your velvet furniture.
- Examine the pile of your velvet upholstery by running your hand from back to front, if its smooth this is the direction of the pile, brush it in this direction using a soft brush. If you want to remove stains from your velvet upholstered furniture, you should make the stain dry by applying a soft clean cloth to absorb any liquid. Don't apply too much pressure as this can crush the fibers. Continue removing the stain by making a cleaning solution. For this, you will need only a little amount of warm water and some drops of dish-wash detergent. Stir and shake this solution until suds occur. Apply the SUDS ONLY onto the stain carefully. You can also use a dry cleaning product to remove the stain (available from any good hardware store, read the manufacturer's instructions carefully!). After you clean the stain, let it dry well and brush it in the same direction as the pile until the velvet returns to its normal appearance.
- A steam cleaner is perfect for removing stains, dirt and debris, disinfecting the velvet fabric, without leaving any damage to it. This process is best performed by a professional.

How to care for Leather & Faux Leathers

- Always use reputable leather cleaning products and follow the manufacturer's recommended instructions. Regular wiping with a damp, soft cloth is often enough to keep a leather sofa looking pristine.
- Vacuum your leather sofa regularly, to remove dust and dirt, especially along the stitch lines.
- Keeping your leather seating at least 50cm from a heat source will help to avoid the leather cracking.
- Spilt liquid should be blotted immediately with a dry cloth or kitchen paper until it is dry, do not rub the area as this could cause discoloration or damage to the finish.
- Avoid overexposing your furniture to sunlight, it will help to prevent colour fading.
- Beware of sharp objects that could tear, cut, or scratch leather.

How to care for Indoor Wooden Furniture

- Furniture with a hard lacquer, wax polish or painted surface should be dusted with a dry cloth.
- Waxed furniture will need to be given a coat of beeswax a couple of times a year to help maintain its luster.
- Spray polishes are best avoided as they contain silicones which may spoil the furniture's surface by building up over time.
- Make sure all surfaces are protected from heat and liquids by mats and coasters. Wipe up spills immediately and ensure that a mat or pad is placed under paper if you are writing. Do not leave liquids to settle on the surface as this will damage the finish.
- Extendable dining tables should be left extended for the first few months to avoid an uneven appearance. Likewise, lamps and ornaments should also be moved regularly.
- Furniture will endure most temperatures in the home but it is best to avoid placing furniture next to heat sources such as radiators or fires. Be particularly careful with solid wood as the lack of humidity caused by central heating can cause damage such as warping and cracking.
- Wooden furniture should be protected from direct intense sunlight and exposure to magnification heat from large glass windows and doors. These conditions can cause premature warping and potential splitting to occur in timbers.

How to care for Painted Wood finishes – additional information to above Wooden Furniture

- Hand painted brush stroke finish's will hold up to everyday wear and tear quite nicely. However, it is important to remember that your piece is still a wood piece of furniture and should be cared for as such.
- Painted furniture still requires regular dusting with a damp cloth. When very soiled wash with a solution of mild, non-abrasive detergent and warm water. Wring a cloth nearly dry and work on a small section at a time, then rinse with clear water and dry after.
- Never leave water to settle on the surface as this will cause damage. Any liquid spilled onto the item should be cleaned up immediately using an absorbent cloth.
- AVOID chemical cleaners or liquid furniture polish including direct contact with greasy substances
- As with all natural wood products, there will be some movement within the parts as the furniture acclimatises to its surroundings, you may see slight chipping and cracks where panels meet, this is a completely natural occurrence with ALL painted products using natural solid timbers.
- Painted surfaces can be carefully touched up with matching paint.There will be various brush lines, slubs, and little inconsistencies in the painted finish, this is all part of the relaxed handfinished look and feel of hand painted collections.

How to care for Glass furniture

- Never use sharp items on the surface of the product. For example knives and utensils may damage the product. It is also advisable to place a mat under paper when writing.
- If the product component is chipped or broken, please consult the manufacturer, retailer or agent with regard to obtaining a manufacturing specification and shape for replacement glass quoting the model number and batch number.
- Do not use the glass as a chopping surface. Do not strike the glass with hard or pointed objects.
- Do not sit or stand on horizontal glass surfaces.
- Do not place very hot or very cold items against or in close proximity to a glass surface.
- The surface should be protected with coasters, trivets or placemats.
- All spills should be blotted up immediately. Do not wipe the spill or this may spread it.
- Clean the surface with a clean soft cloth (non-abrasive) and mild detergent or stone soap.

How to care for Marble furniture

- Marble comes in many variations with its creation being natural thousands of years ago. Every piece of marble will have its own structure with random grain patterns, irregular markings, mottling or vein streaks including small fissures or pinholes. These are all natural geological features.
- Never use sharp items on the surface of the product. For example knives and utensils may damage the product. It is also advisable to place a mat under paper when writing.
- The surface should be protected with coasters, trivets or placemats.
- All spills should be blotted up immediately, do not wipe the spill as this may make it spread.
- Clean the surface with a clean soft cloth (non-abrasive) and mild detergent or stone soap. Do not use cleaners containing acids. It is recommended a generous layer of marble wax is applied at regular intervals to maintain and protect the finish. This should especially be applied after cleaning once the finish is dry.
- For food surfaces such as kitchen islands please ensure you use a food safe marble wax. Details on these can be found on the wax packaging or from the manufacturer.

How to care for Concrete / GRC (Glass Reinforced Concrete)

- DO NOT use any acid cleaners on your Concrete / GRC furniture
- All normal non-abrasive household or institutional cleaners are acceptable, however if the cleaner has never been used before, it is advisable to pick a small area on a non visible part of your item and test the cleaner for discoloration before wide spread use. We recommend a solution of 4 parts water to 1 part white vinegar or an All-Purpose Cleaner for daily cleaning of your concrete furniture.
- DO NOT place any hot objects directly onto the surface of your Concrete / GRC furniture – always use a table mat or trivets to ensure no damage from high heat.
- Use a cutting board. Knives will pierce the sealer, rendering the surface more susceptible to staining. Additionally the concrete will severely dull the knife's cutting edge. Scratches in the sealer may occur if heavy, rough or sharp objects are dragged across the concrete table top surface. Should a scratch occur, it could be repaired and/or minimized with a touch-up of a concrete sealer available in a most hardware stores.
- Non-structural hairline cracks are possible and are considered an inherent part of the product, not a manufacturing defect. Hairline cracks can occur at any time during the life of the furniture, but are not a common occurrence. Hairline cracks do not threaten the integrity or stability of the item nor prevent the continued and normal use. If a hairline crack should appear in your concrete item, it can be repaired in the same manner as a scratch.
- Your item is sealed and resistant to a wide variety of substances. Spills should be cleaned immediatly as stone and concrete are acid sensitive. It is important to wipe up spills from acidic substances (for example citrus juice) immediately, before acid etching occurs.
- To prolong the finish and longevity of your item, placement in a location with shade or under a parosol is preferable. Covering during the harsher times of year will reduce damage and weathering.
- Pressure washers should never be used to clean your concrete or GRC item as it will damage the finish and remove all of the protective sealer.

How to care for Metal furniture

- Metal furniture requires minimal maintenance:
- Cleaning your metal furniture is very simple. Use a soft cotton cloth and clean with mild detergent or water, using a towel immediately dry the furniture afterwards.
- Metal furniture is usually damaged due to rust, as a precaution a soft wax after cleaning will help seal it.
- If it has a few spots of rust, you can treat it with rust remover, following the manufacturers guidelines. (some finishes are made to look like rust)
- Smudges and smears, including surface rust residue can be removed from metal furniture by using a window cleaner or mild detergent and a paper towel.
- Indoor metal furniture is not recommended for outdoor use as it has not been treated for the harsh outdoor environment.

How To Care For Paper Wicker and Paper Rush Product

- Since these types of products have sections made from the same authentic paper fiber material that was used in a great deal of wicker furniture manufactured since 1904, the cleaning treatments are the same for both paper wicker and paper rush.
- Vacuum frequently, use a damp cloth to clean stubborn dirt, and a slightly wet toothbrush to get into tight corners**. In case of accidental spillage, your best option is to act quickly!** Immediately after spilling, first try using a paper towel and press firmly (not wipe) to soak up as much moisture as possible. If a colour stain remains, try a ‘damp’ cloth to soak up the stain. If this does not remove the colour stain, try to gently ‘wipe’ the area with a damp sponge.
- **IMPORTANT:** Do not soak or immerse the seat in water. Try avoid excessive ‘wiping’ as this can damage the surface fibers of the paper. Never use harsh soaps or cleaning liquids on the paper cord seat as they can damage the material.

How to care for Outdoor Furniture

- Any metal frame of the furniture is all-weather proof. However, although cushions are water resistant only, these are not suitable to be left out in a rain shower or heavy / prolonged rain as this will damage and stain them due to the fire resistant materials used. They are suitable to be left out overnight if there is to be no rain. Cushions should not be left outside continuously and you will need to store your cushions away when not in use to keep them at their best. They can be sponge cleaned with a gentle detergent. Avoid machine washing as this may affect the Fire Retardant coating. Before storage ensure cushions and upholstery are dry fully to avoid mould and mildew.
- Outdoor wooden items need to be cared for annually by cleaning with soapy water and applying a suitable water-repellent sealant, stain, or oil to prevent rot and UV damage. For best results, clean in the spring, apply treatment, and use protective covers or store furniture indoors during winter. NEVER CLEAN YOUR WOODEN FURNITURE WITH A PRESSURE WASHER AS THIS WILL DAMAGE THE FINISH AND REMOVE PROTECTIVE OILS AND LAQUERS
- We recommend using a parasol over dining sets on sunny days to protect from direct sunlight. In windy conditions don't forget to store your furniture away especially a parasol.
- We recommend during winter months all garden sets are covered or stored in an out building. Cushions should always be stored inside as previously described.
- Never use sharp items on the surface of the product. For example knives and utensils may damage the product. It is also advisable to place a mat under paper when writing.
- Metal furniture designed for outdoor use will age naturally due to the additional elements found in an exterior environment.
- It is quite normal for cast and wrought iron products to develop surface rust and this aged appearance of the metal is to be expected. The rust will not affect the integrity of the product but adds a rustic patina finish to the items. Most of our iron products are supplied to naturally age in this way.
- Metal products will age quicker when in close vicinity to the coast due to the increase of salt in the atmosphere.
- Steel and aluminum products will dull and corrode over time, again depending on placement and exposure to the elements.
- Some planters and furniture will have distressing, antiquing or faux rust already applied and this is a unique feature to depict a pre aged appearance.
- Be mindful when placing some products designed to rust as part of their feature as they could leave tarnishing when hung on a wall or placed on the ground.
- Metal furniture requires minimal care and maintenance:
    - Use a soft cotton cloth and clean with mild detergent or water.
    - Specific metal cleaning products are available from hardware stores.
    - Smudges and smears can be removed from metal furniture by using a window cleaner and a paper towel.
    - Indoor metal furniture is not recommended for outdoor use.

PLEASE KEEP THESE INSTRUCTIONS FOR FUTURE REFERENCE