Jordyn
Double Wardrobe

Assembly & Care Instructions

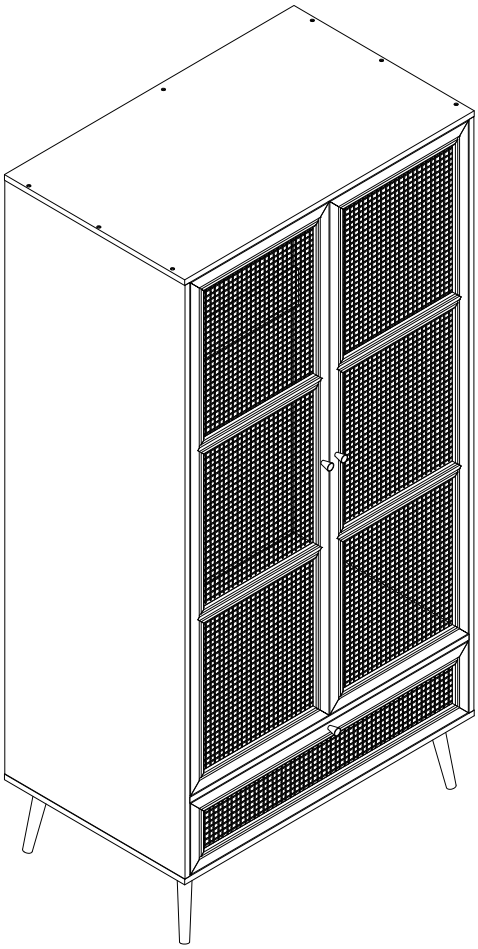

Dunelm

www.dunelm.com

Getting Started.

1. Check you have received all parts listed on the component and hardware pages and the correct quantity of each. Beware that sometimes parts are packaged within the product so not immediately visible after opening. Please check the assembly section for more details. If anything is missing, stop assembling the product and contact our customer service team.
2. Check all parts are intact and undamaged. Any issues, stop assembling the product and contact our customer service team.
3. Check you have the right tools for the job. Required tools which are not provided are listed below. If you are unsure of how to use these tools, please contact a professional tradesperson. We recommend Airtasker as an easy way to find trades people in your local area.

Tools required which are not included

Flat head screwdriver	Cross head screwdriver	Spirit level	Tape measure	Pencil	Drill
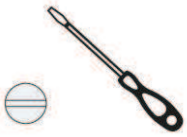					

Safety advice.

Dear Customer

- **IMPORTANT** – The first step you need to take is to ensure your safety! Please take the time to read and understand these instructions before assembling the product.
- Please keep these instructions for future reference.
- This item is intended for indoor use only – unless otherwise specified. Avoid exposure to humid conditions.
- Assembly to be carried out by a competent adult only.
- During assembly children should be kept away from the product due to possible risk of injury. The product may contain small parts that could also cause choking if swallowed.
- Products can be dangerous if incorrectly installed or assembled. Assembly should be carried out by a competent person and instructions followed. No liability will be accepted for damage or injury caused by incorrectly installed or assembled products.
- Never use an electric drill to assemble a product, as this can cause damage to parts.
- Regularly check all fastenings to ensure that they are properly tightened.
- Restrain children from climbing or playing on or around the product. Always consider where products are positioned to ensure children cannot get access to long cords or windows.
- Some products will be supplied with anti – tip kits which should always be used to secure the product to the wall and prevent tipping.
- Keep all plastic wrapping materials away from babies and children to avoid danger of suffocation.
- Ensure that all packaging is disposed of carefully and responsibly. Please recycle where possible.
- Once items are part or fully assembled, they are not returnable unless faulty.

Max weight limit	No. of people to assemble	Assembly difficulty	Time to assemble
70 KG	2 recommended	Medium	30 mins-1 hour

Parts supplied.

Ref	Part	Visual	Qty
1	Top panel (90 x 56 x 1.5 cm)	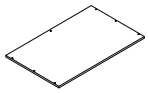	**1**
2	Left side panel (158.1 x 55.9 x 1.5 cm)	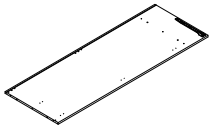	**1**
3	Right side panel (158.1 x 55.9 x 1.5 cm)		**1**
4	Front trim (86.7 x 4 x 1.5 cm)	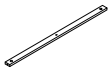	**1**
5	Upper back crossing panel (86.7 x 9.5 x 1.5 cm)	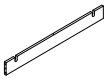	**1**
6	Lower back crossing panel (86.7 x 9.5 x 1.5 cm)	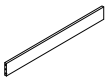	**1**
7	Shelf (86.7 x 54.3 x 1.5 cm)	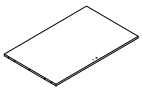	**1**
8	Base panel (90 x 56 x 1.5 cm)	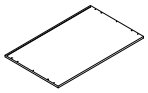	**1**
9	Left back panel (158.9 x 43.7 x 0.25 cm)	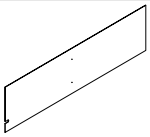	**1**
10	Right back panel (158.9 x 43.7 x 0.25 cm)	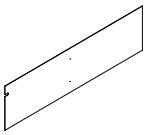	**1**
11	Back panel clip (158 cm)	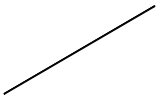	**1**
12	Leg (18 x 4 x 2.5 cm)		**4**

Parts supplied.

Ref	Part	Visual	Qty
13	Hanging rail (86.2 cm)		**1**
14	Door panel (136.6 x 43 x 1.8 cm)	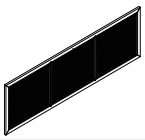	**2**
15	Drawer back panel (81.9 x 14 x 1.2 cm)	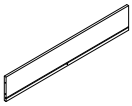	**1**
16	Drawer left side panel (35 x 14 x 1.2 cm)		**1**
17	Drawer right side panel (35 x 14 x 1.2 cm)		**1**
18	Drawer support panel (33.7 x 4 x 1.2 cm)		**1**
19	Drawer base panel (82.5 x 34.5 x 0.25 cm)	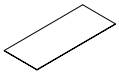	**1**
20	Drawer front panel (86.1 x 19.1 x 1.5 cm)	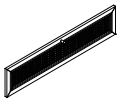	**1**

Hardware supplied.

Ref	Hardware & dimension (mm)	Qty
A	Wooden Dowel M8×30mm	**16**
B	Screw M5×40mm	**18**
C	Dowel M4×14mm	**20**
D	Bolt M4×22mm	**3**
E	Screw M3.5×14mm	**40**
F	Screw M3×16mm	**6**
G	Screw M4×25mm	**1**

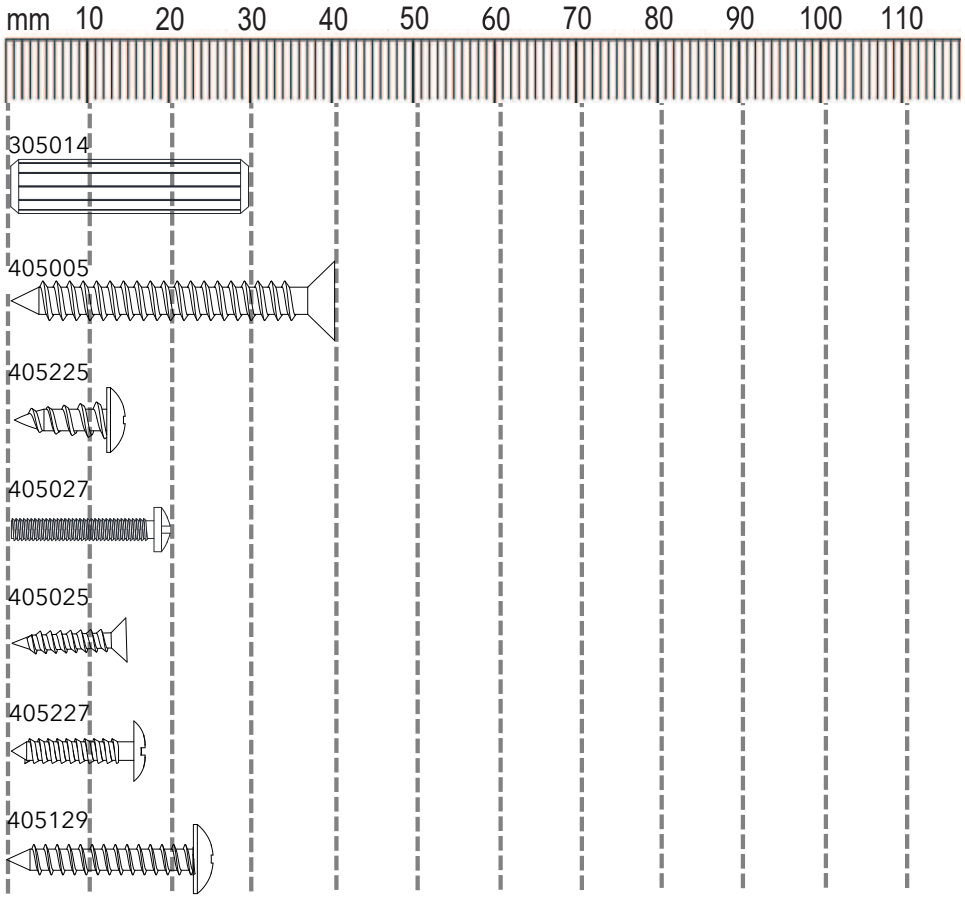

Ref	Dimensions	Visual	Qty
H	7×43mm	407523	**21**
I	N/A	303085	**21**
J	N/A	408003	**2**
K	N/A	406404 405226	**2**
L	N/A	408794	**1**
M	N/A	408523	**4**
N	N/A	408006	**4**

Ref	Dimensions	Visual	Qty
O	N/A	407019 405125	**16**
P	N/A	402016	**6**
Q	N/A	305012	**3**
R	N/A	502193	**4**
S	N/A	408692	**2**
T	N/A		**2**

Exploded diagram.

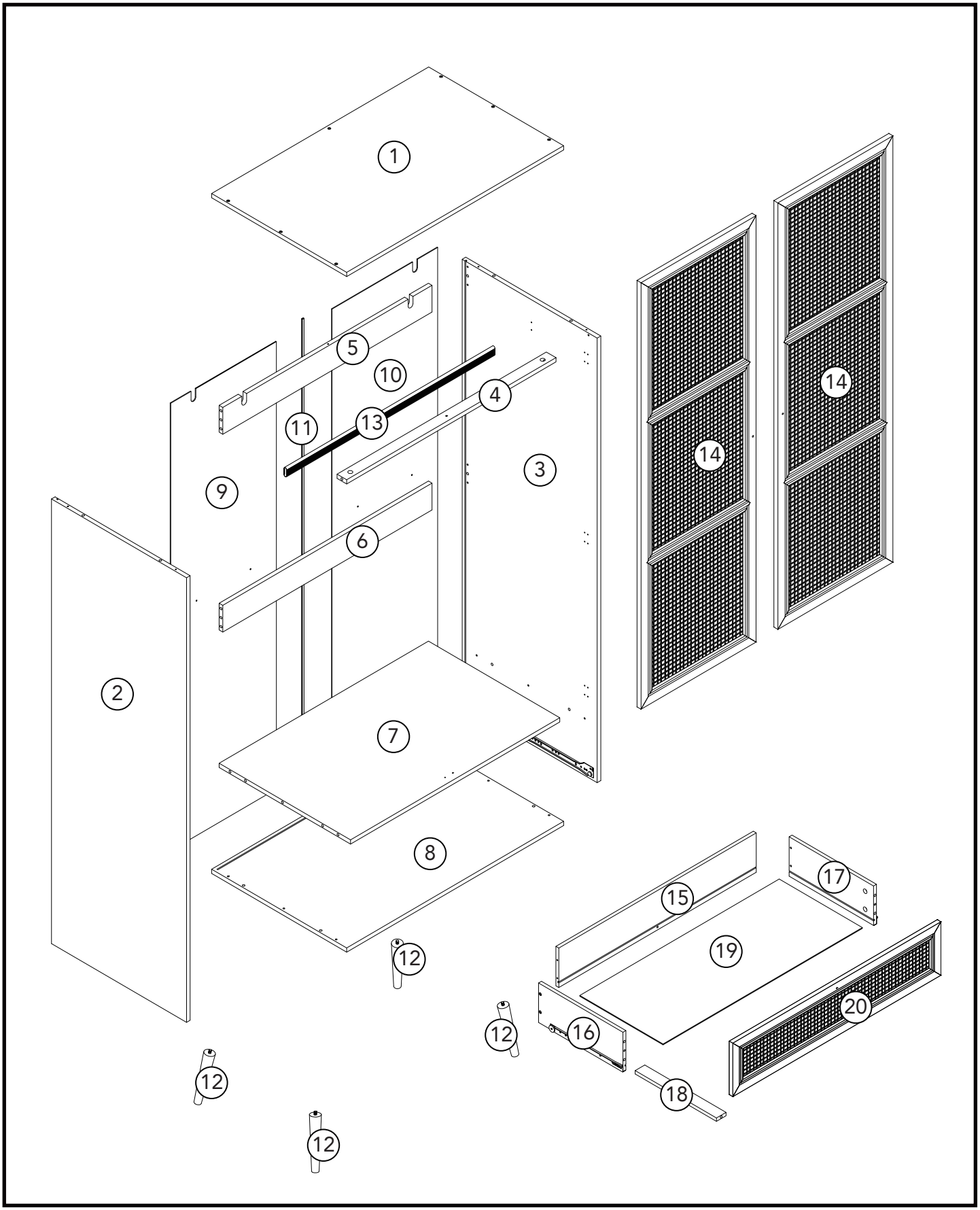

If you are unsure of the below guidance, consult a qualified tradesperson for advice or help.

- Wall fixings are not provided with this product as different wall types require different screws and wall plugs. See table below as a guide only.
- Always use a wall plug, as screws alone will not be secure into walls.
- As a general rule, always use a larger screw and wall plug if you are not sure.
- When drilling into walls always check there are no hidden wires or pipes.
- Make sure that the screws and wall plugs are suitable for supporting the weight of the product.
- Ensure you use the recommended drill bit to match the required hole size for the wall plug. Wall plugs must fit tightly into the drilled hole.
- Ensure you drill the hole horizontally, do not force the drill or enlarge the hole.
- Take extra care when drilling high walls.
- Ensure the plug is fitted below the ceramic title to avoid splitting or cracking

Care and Maintenance.

- Regularly check the fixings to ensure the wall plug or screws have not become loose. Tighten or stop using the product if they have.

Wall plug types		
You can use one of the following types of wall plug if your walls are made of brick, breeze block, concrete, stone, wood or plastic board.		
General Purpose	Plasterboard	Hammer
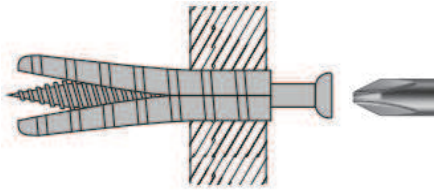	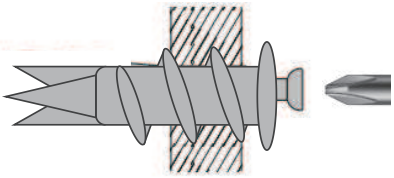	
For light loads only. Options available for most wall types.	For light loads only. Attach into plasterboard.	For light loads only. For solid walls covered with plasterboard. Allows the fixing to be attached into brick behind.
Cavity – Light load	Cavity – Heavy load	Shield Anchor
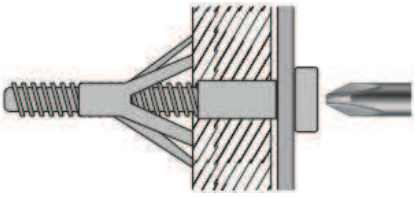	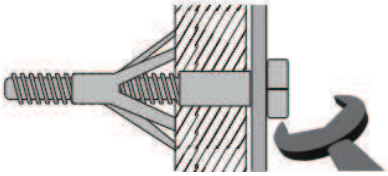	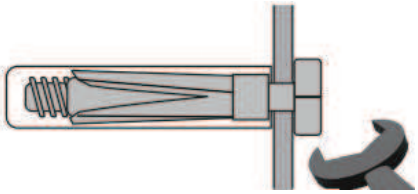
Light load cavity wall plug for use into plasterboard or hollow wooden doors.	Heavy load cavity wall plug for use into plasterboard or hollow wooden doors.	For heavier loads into masonry, brickwork or concrete.

WARNING! Tipping hazard
Unanchored products can tip over which can lead to serious or fatal crushing injuries. We therefore recommend anchoring this product to the wall using the enclosed anti-tip kit. **The anti-tip kit has been provided for your safety.**
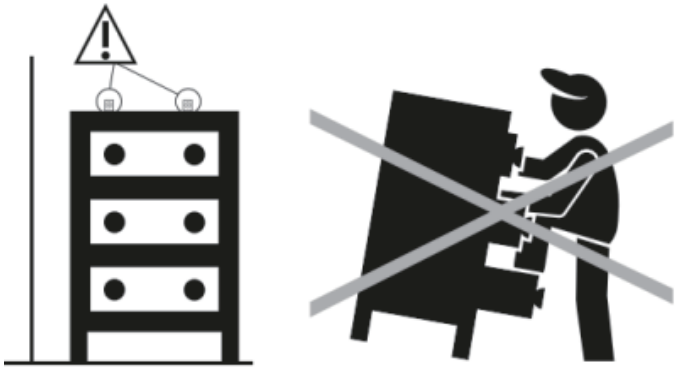

IMPORTANT – Keep these instructions for future reference

- This product is supplied with an anti-tip kit which must be i tted to prevent tipping. This has been provided for your safety.
- Never leave a child unattended around the product.
- Never allow children to climb, hang or pull at the product.
- If in doubt, please consult a qualii ed tradesperson to properly i t the anti-tip kit.
- Wall i xings are not provided with the anti-tip kit as different wall types require different screws and wall plugs. See wall i xing guide within this document for guidance.
- Make sure the screws and wall plugs used are suitable for your wall type and that they can support the weight of the product. Consult a qualii ed tradesperson if unsure.
- Before drilling into walls, always check there are no hidden wires or pipes behind.
- We recommend 2 people install heavy products.

Fixing the anti-tip kit	
Plastic Cable Tie • Position the product where desired. Looking at the hooks on the back of the product, mark appropriate positions for the plastic wall brackets to be i xed, bearing in mind the length of the cable ties. When happy, screw the plastic bracket to the wall using appropriate wall screws and plugs for your wall type. • Attach the cable tie through the product hook and wall bracket. Ensure the plastic tie is securely fastened and the product is held in place. Do not continue to use the product if the cable tie does not secure properly. • The product will now be secured to the wall to prevent tipping.	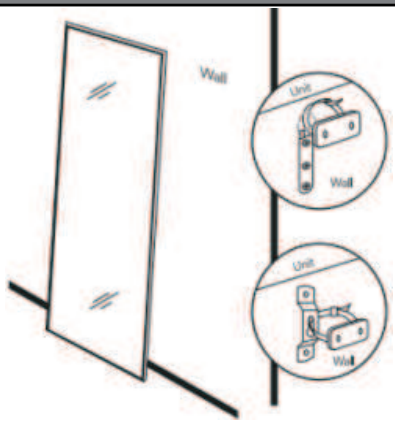
Metal Bracket • Using the product screws provided and the appropriate wall screws and plugs for your wall type, secure the L bracket to the wall and the product as illustrated by the diagram. • The product will now be secured to the wall to prevent tipping.	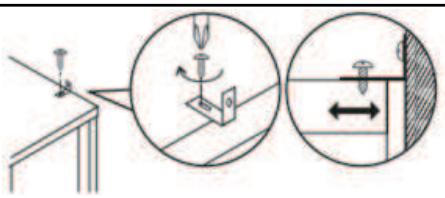

	ALWAYS lay each panel down on a clean and level area, ideally in the room of intended use, ensuring there is enough room to maneuver around the item.
	NEVER pull furniture into place as this causes damage to the internal structure and feet fixings. Always lift to move.
	NEVER flip your upholstery allowing corners to hit the floor as structural damage can be caused. Always turn gently.

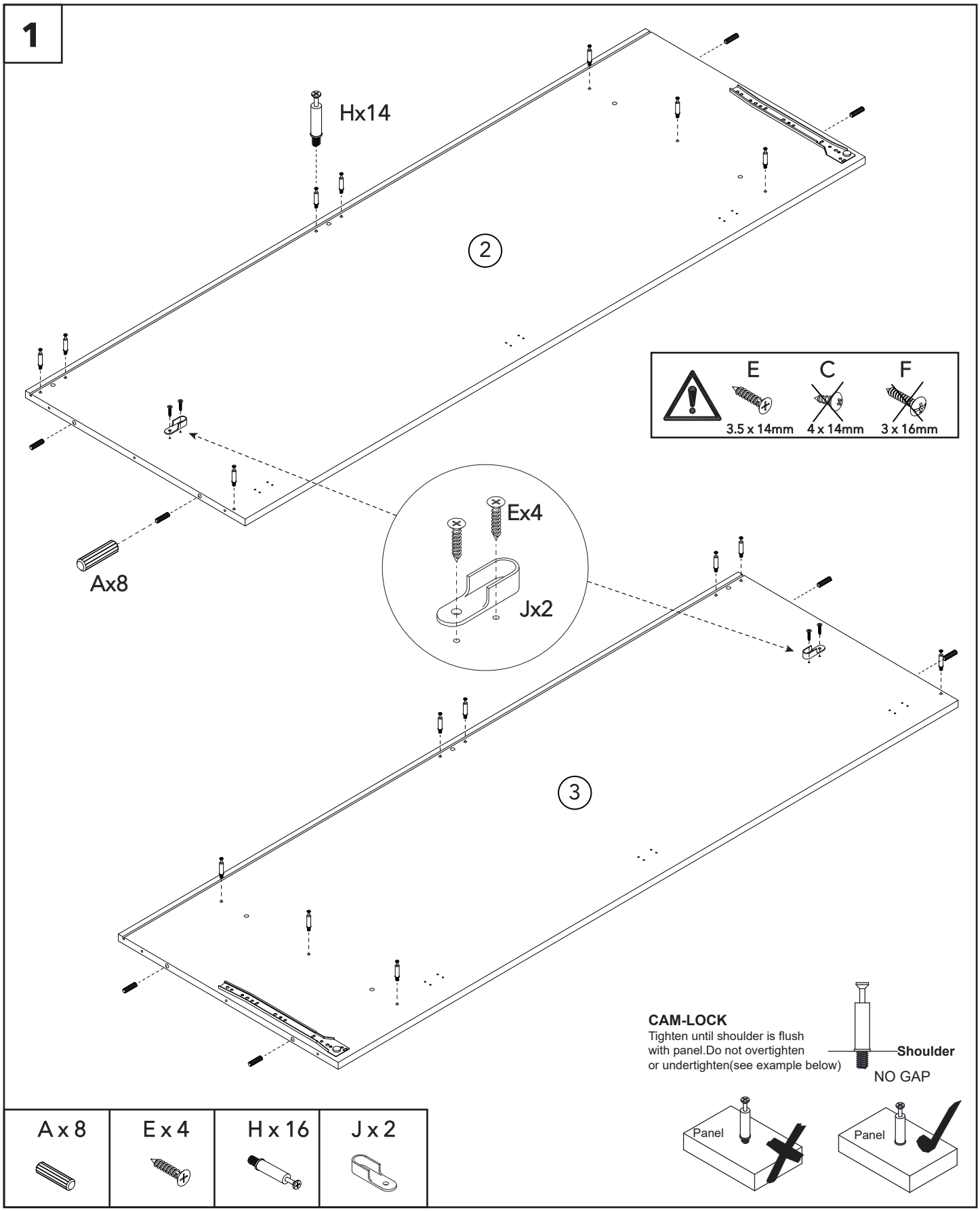

A x 8	E x 4	H x 16	J x 2

2

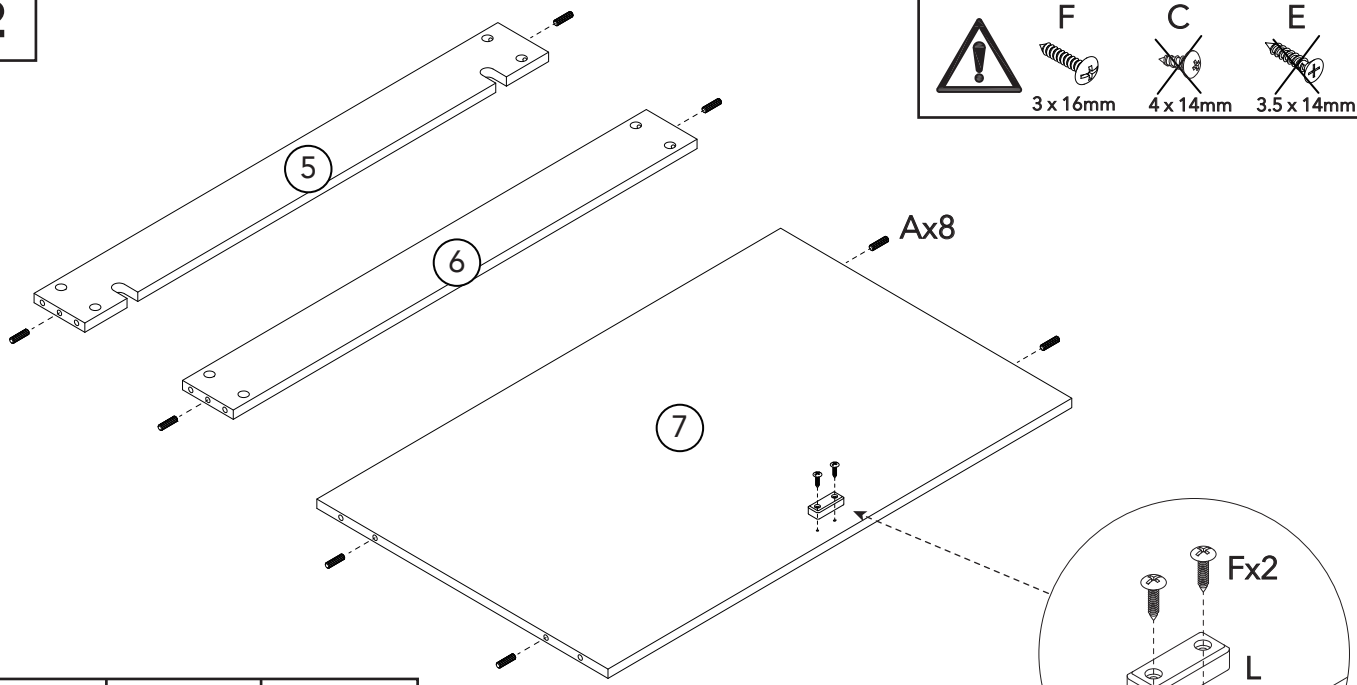

A x 8	F x 2	L x 1

3

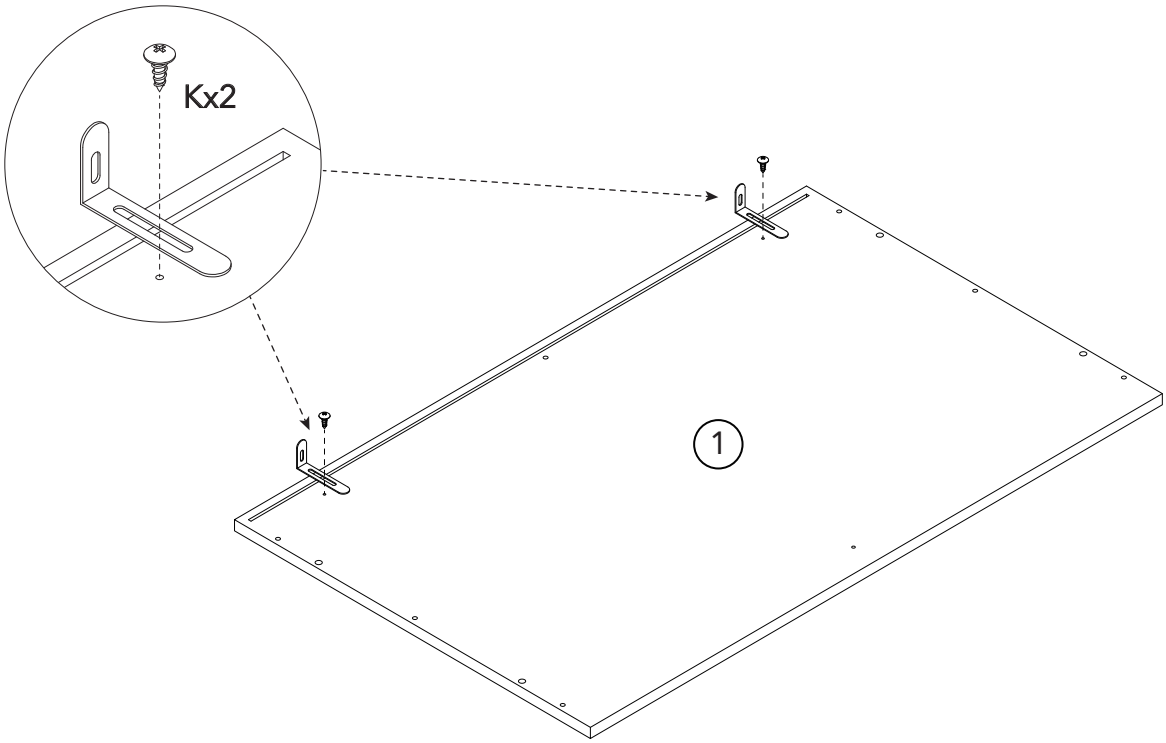

K x 2

4

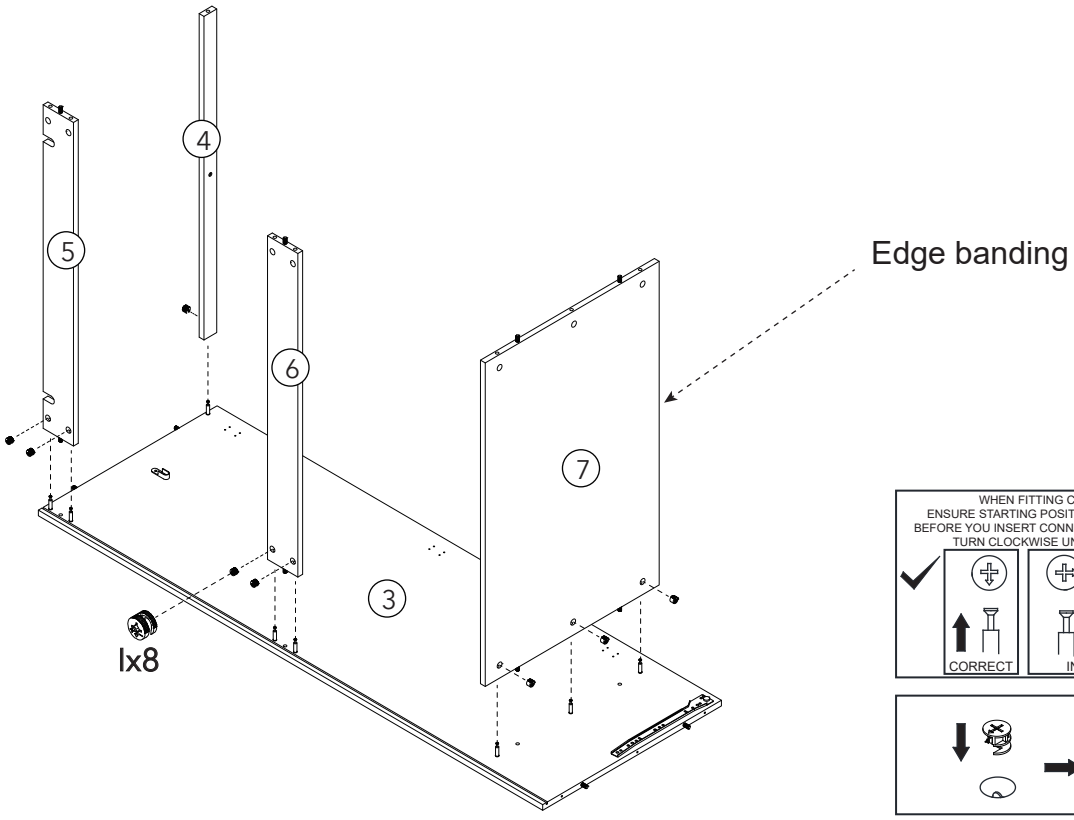
4
5
6
7
3
Edge banding
Ix8

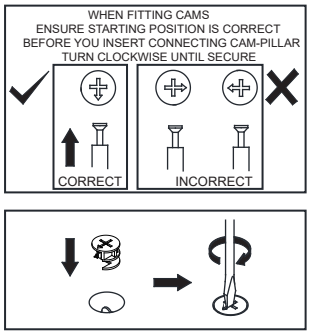
WHEN FITTING CAMS
ENSURE STARTING POSITION IS CORRECT
BEFORE YOU INSERT CONNECTING CAM-PILLAR
TURN CLOCKWISE UNTIL SECURE
CORRECT
INCORRECT

I x 8

5

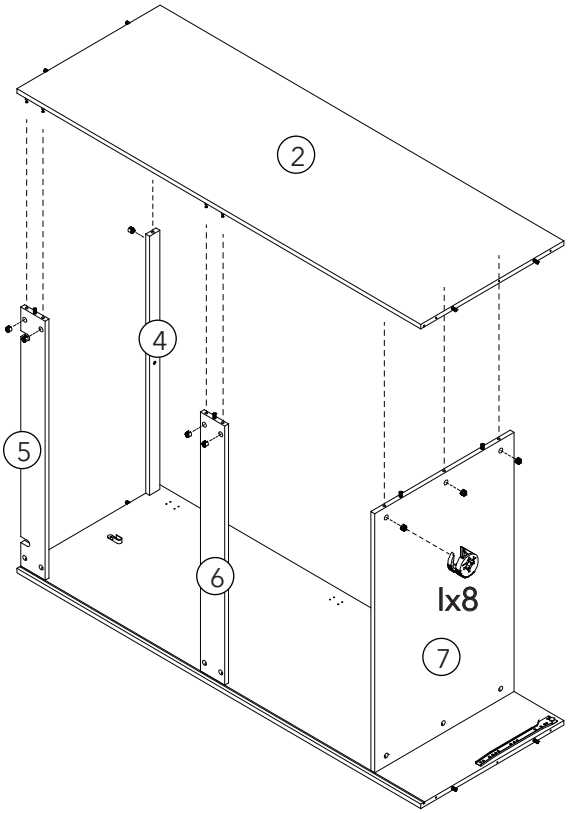
2
4
5
6
7
Ix8

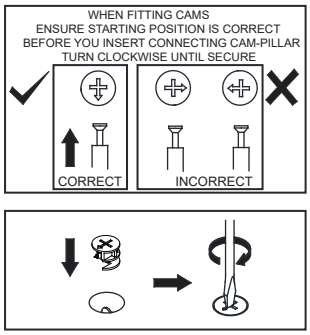
WHEN FITTING CAMS
ENSURE STARTING POSITION IS CORRECT
BEFORE YOU INSERT CONNECTING CAM-PILLAR
TURN CLOCKWISE UNTIL SECURE
CORRECT
INCORRECT

I x 8

6

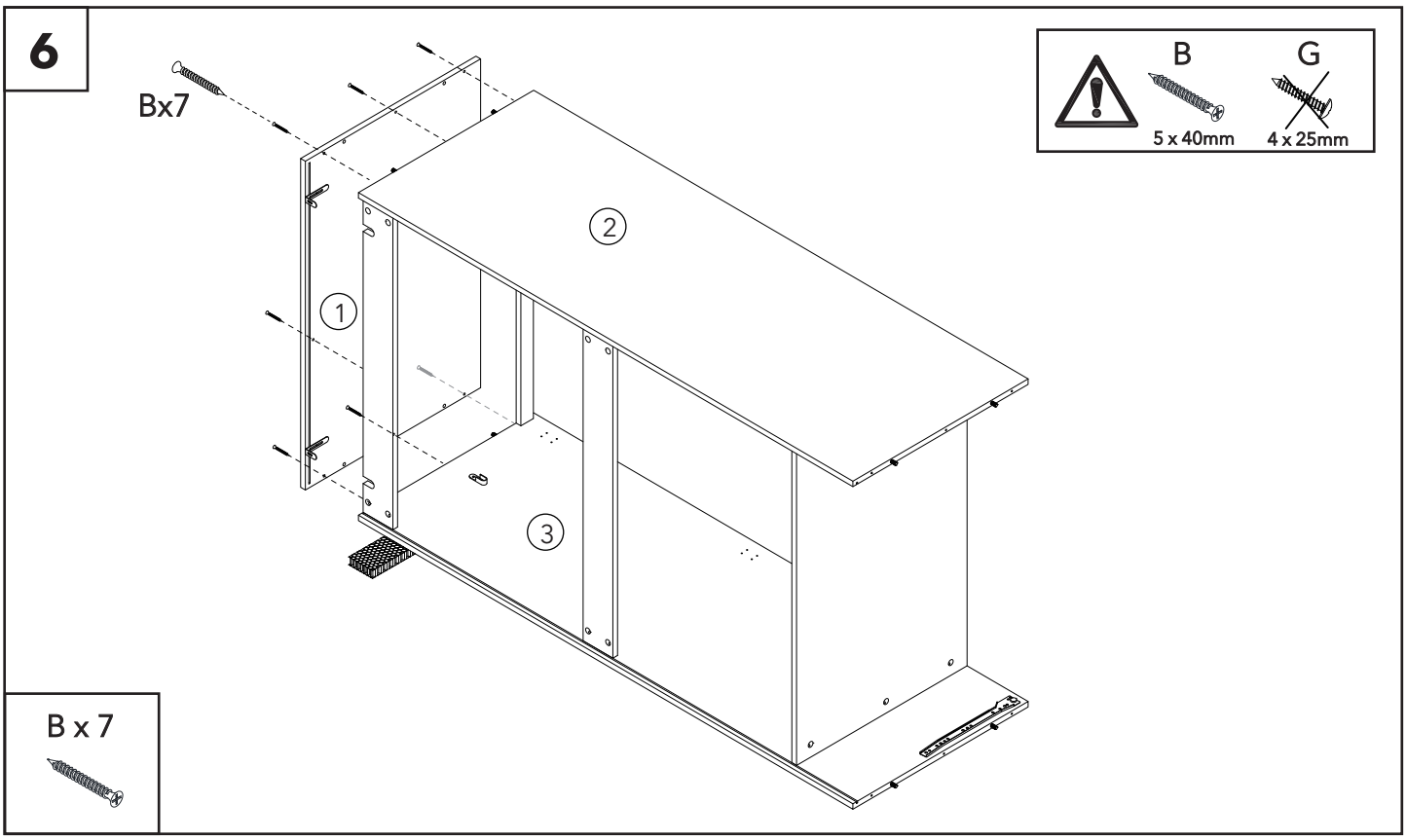

7

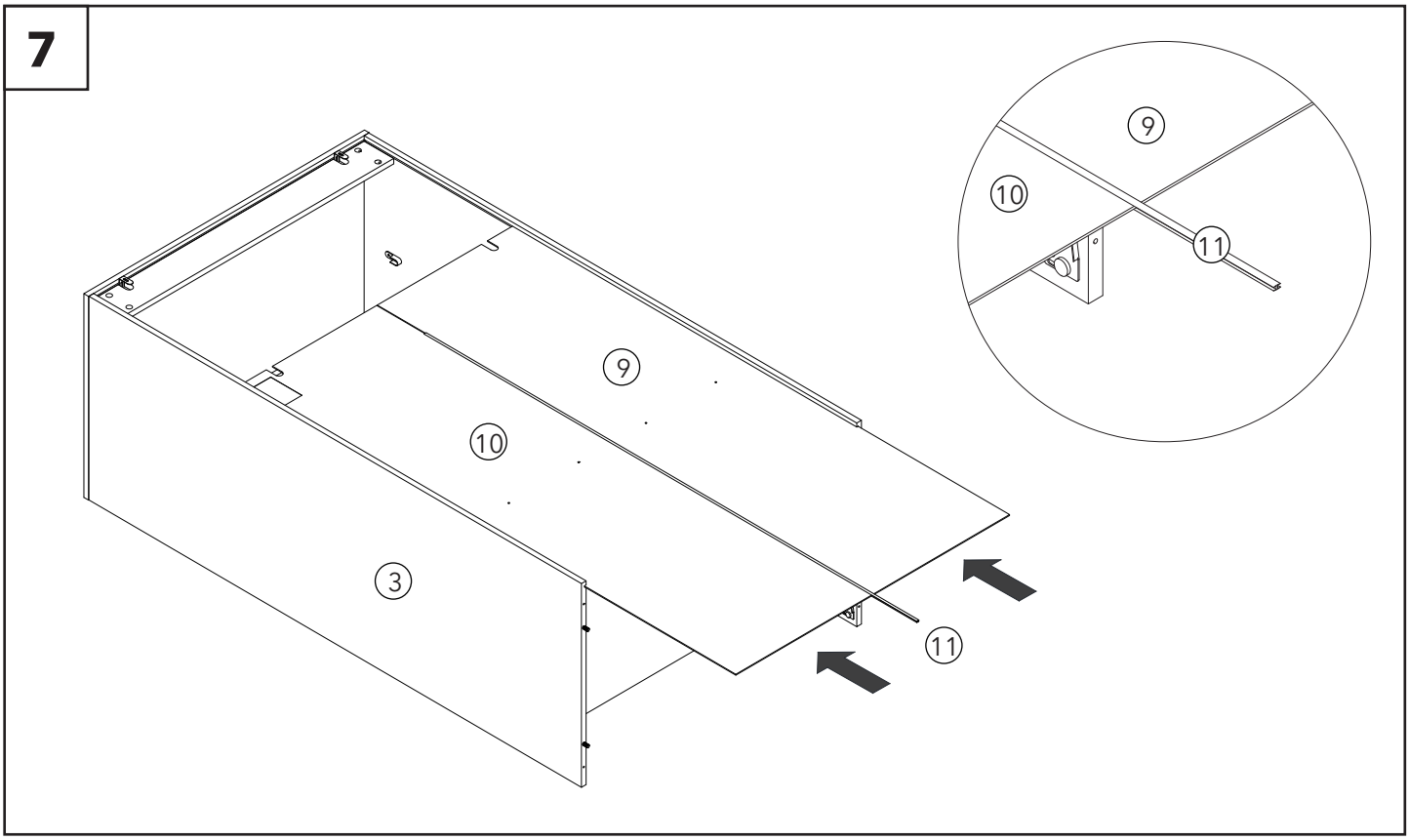

8

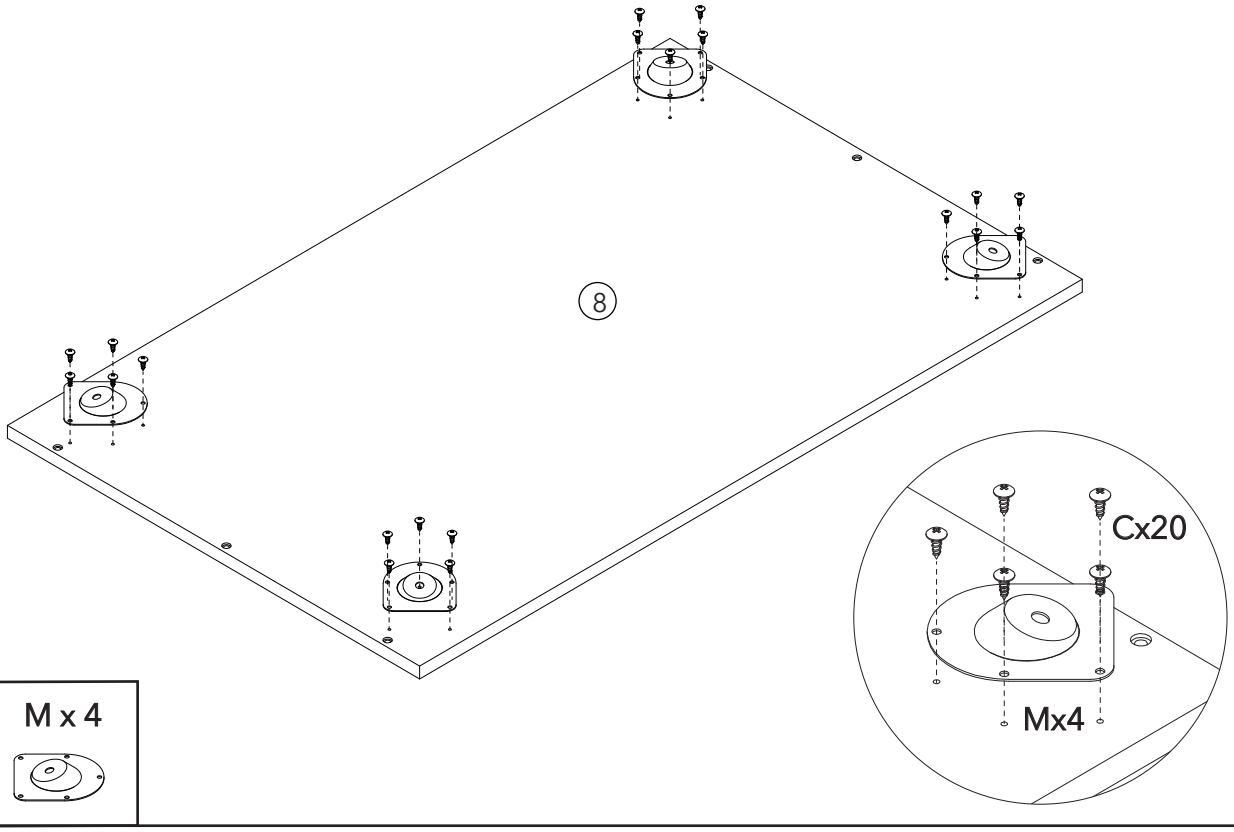

C x 20	M x 4

9

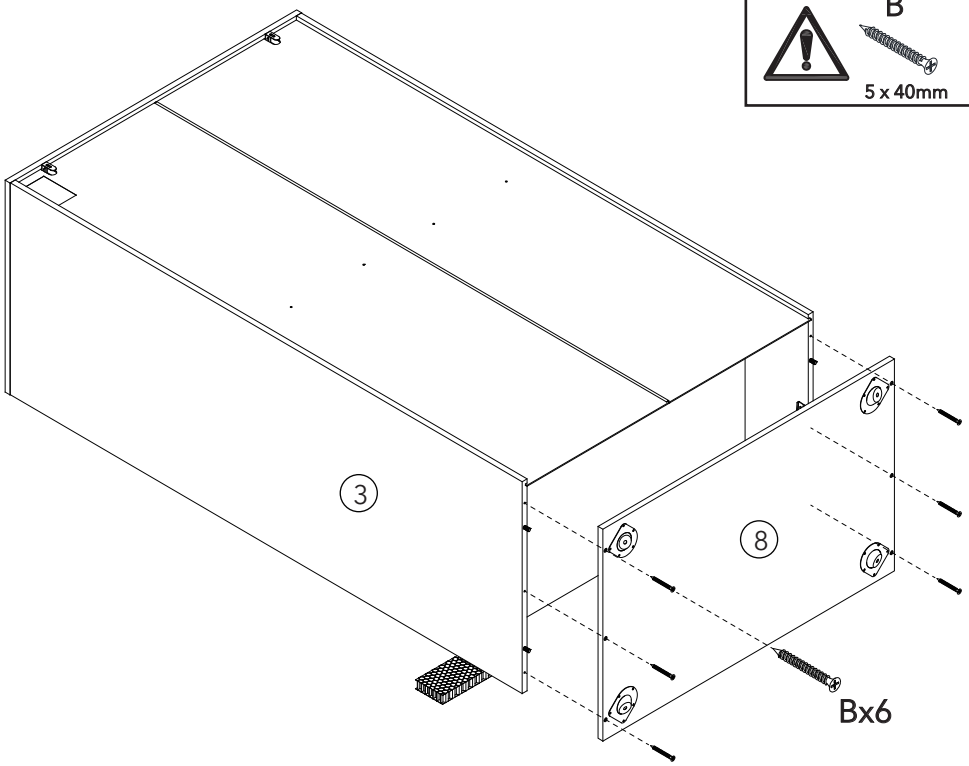

B x 6

10

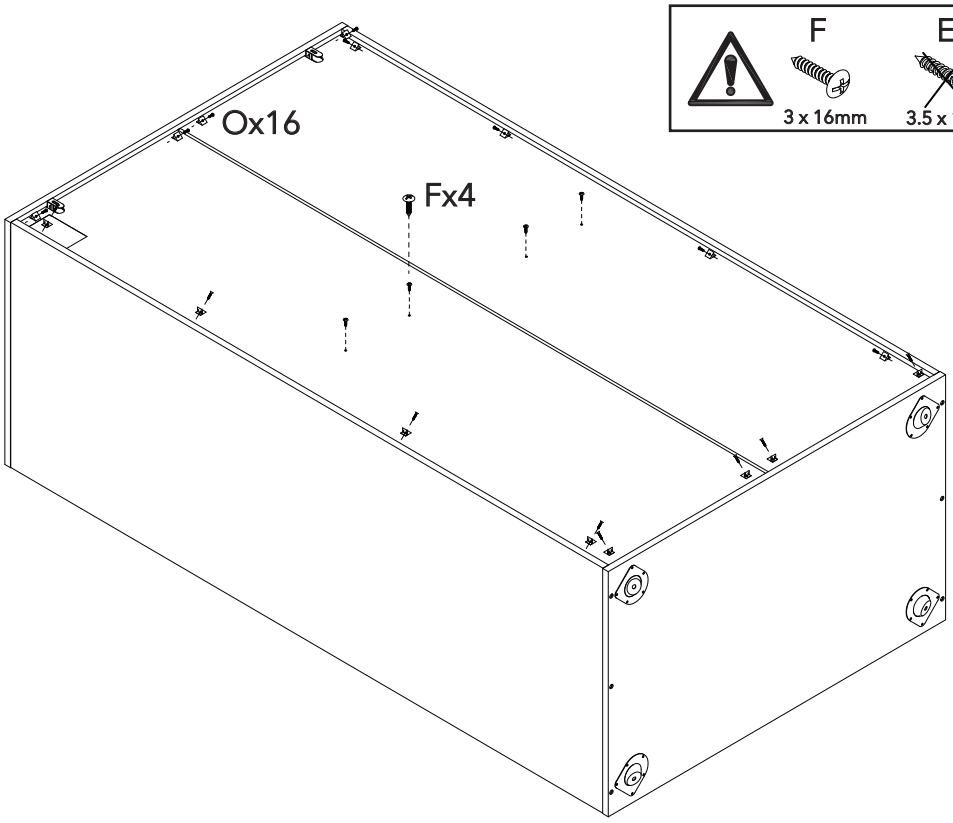

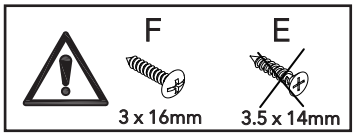

F x 4	O x 16

11

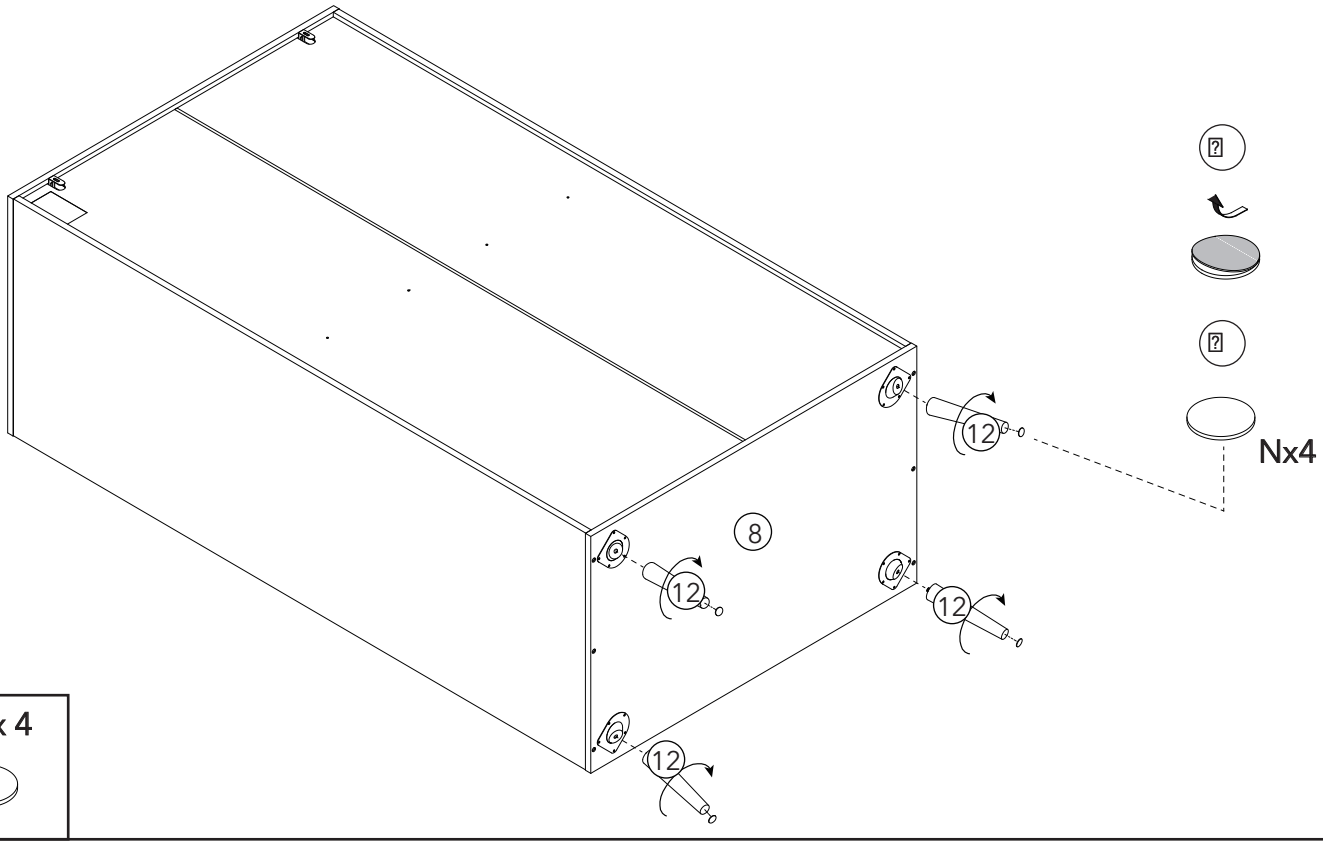

N x 4

12

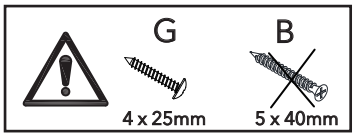

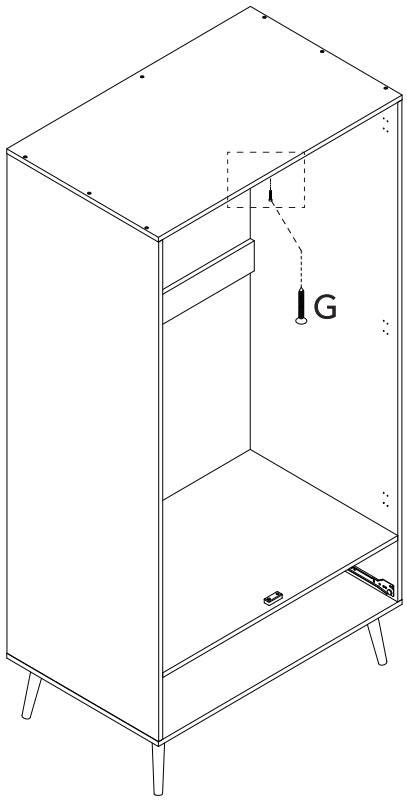

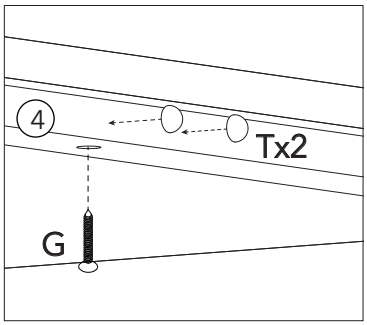

G x 1	T x 2

13

Wall fittings are not provided.

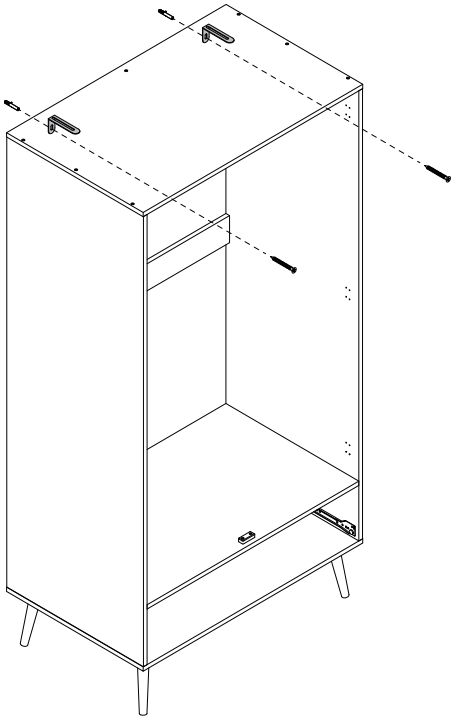

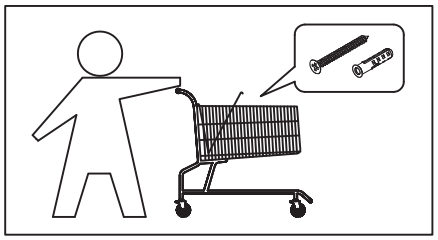

14

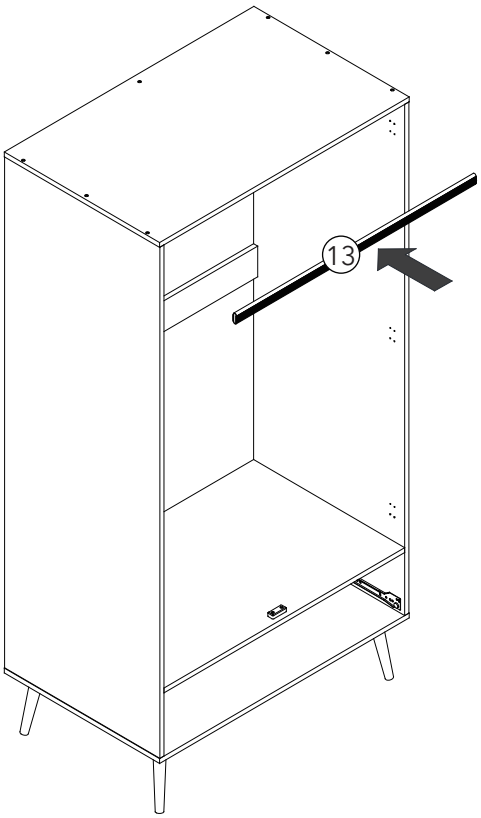

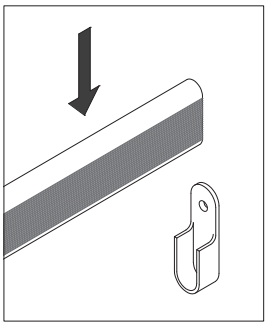

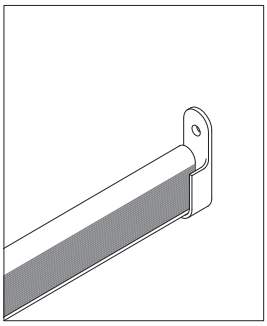

15

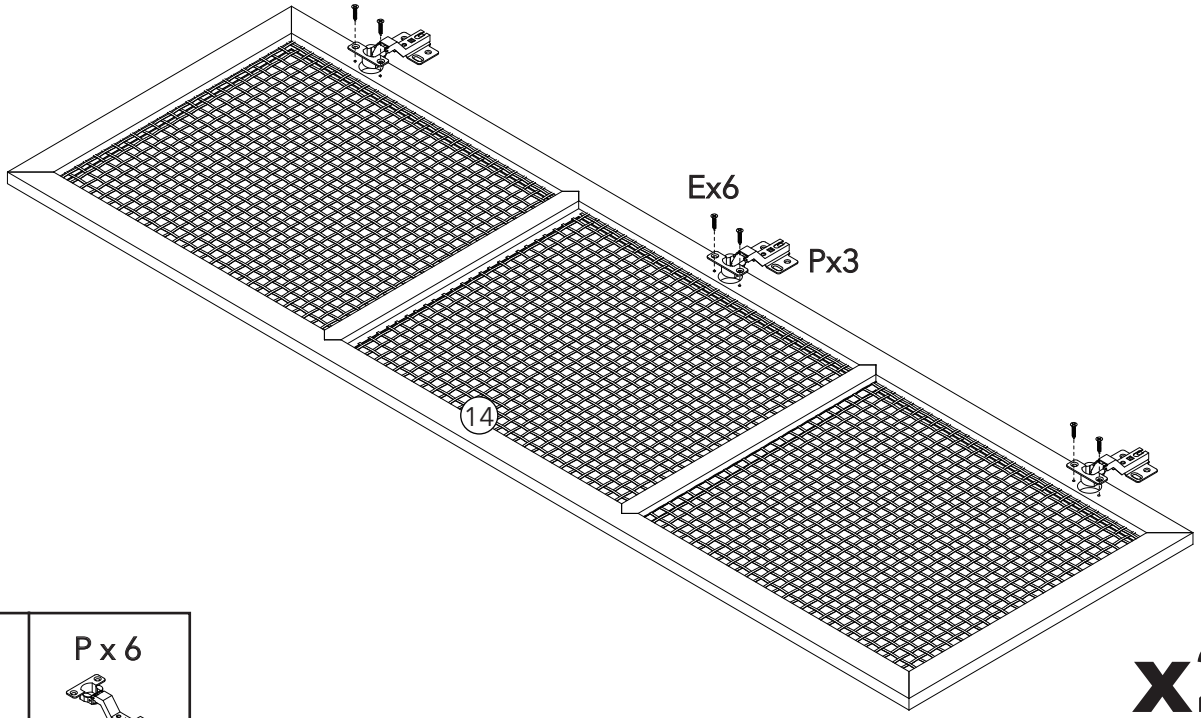

E x 12	P x 6

x2

16

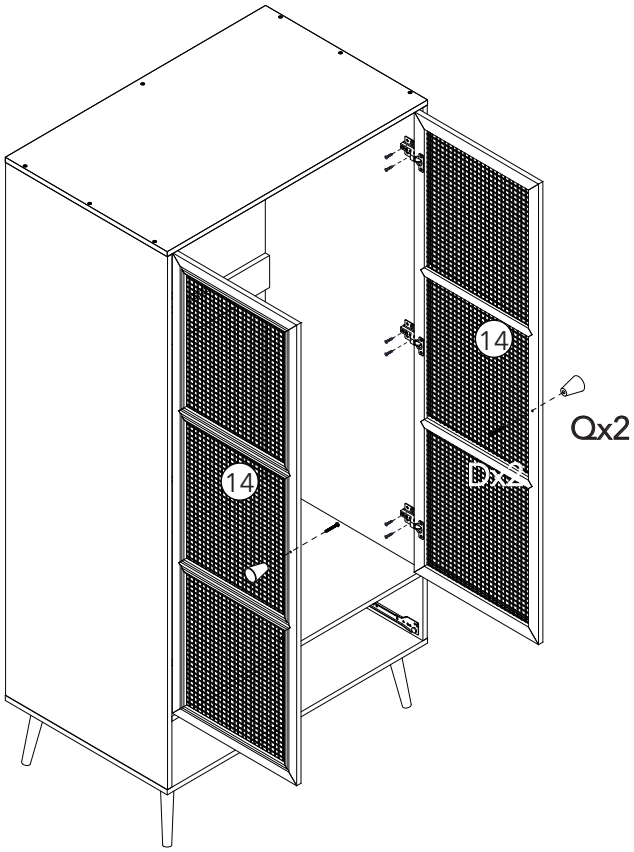

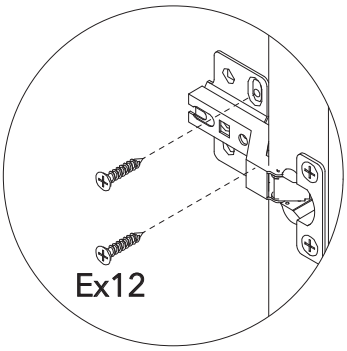

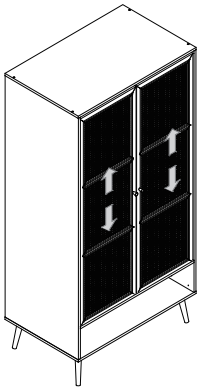

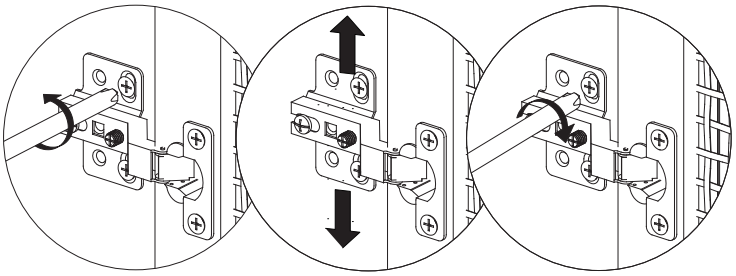

D x 2	E x 12	Q x 2

17

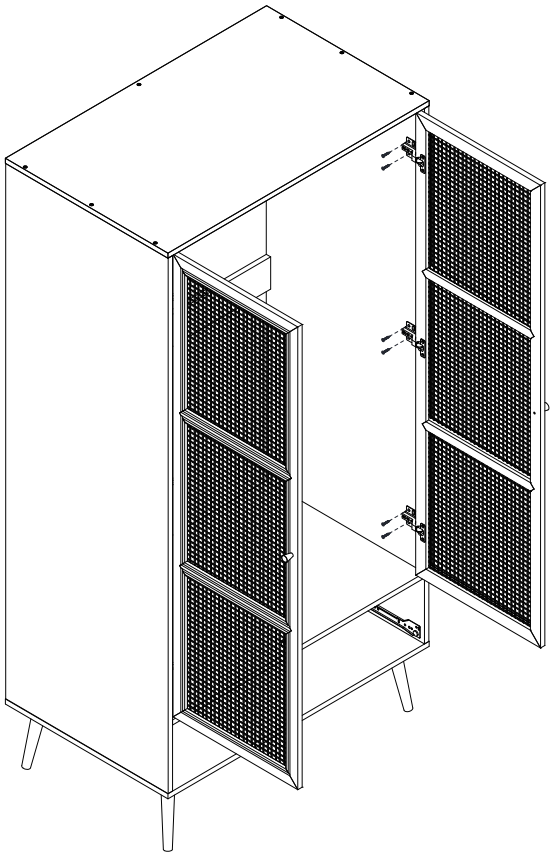

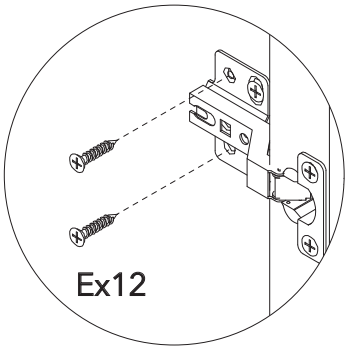

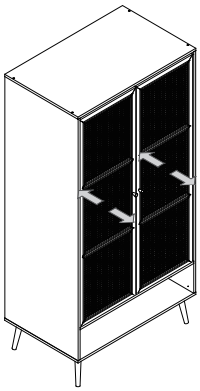

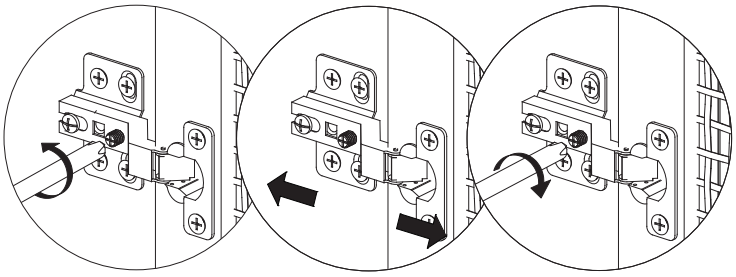

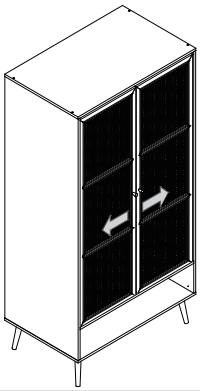

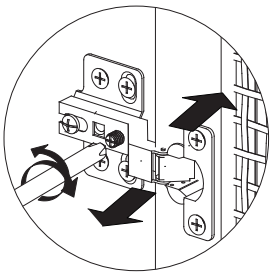

E x 12

18

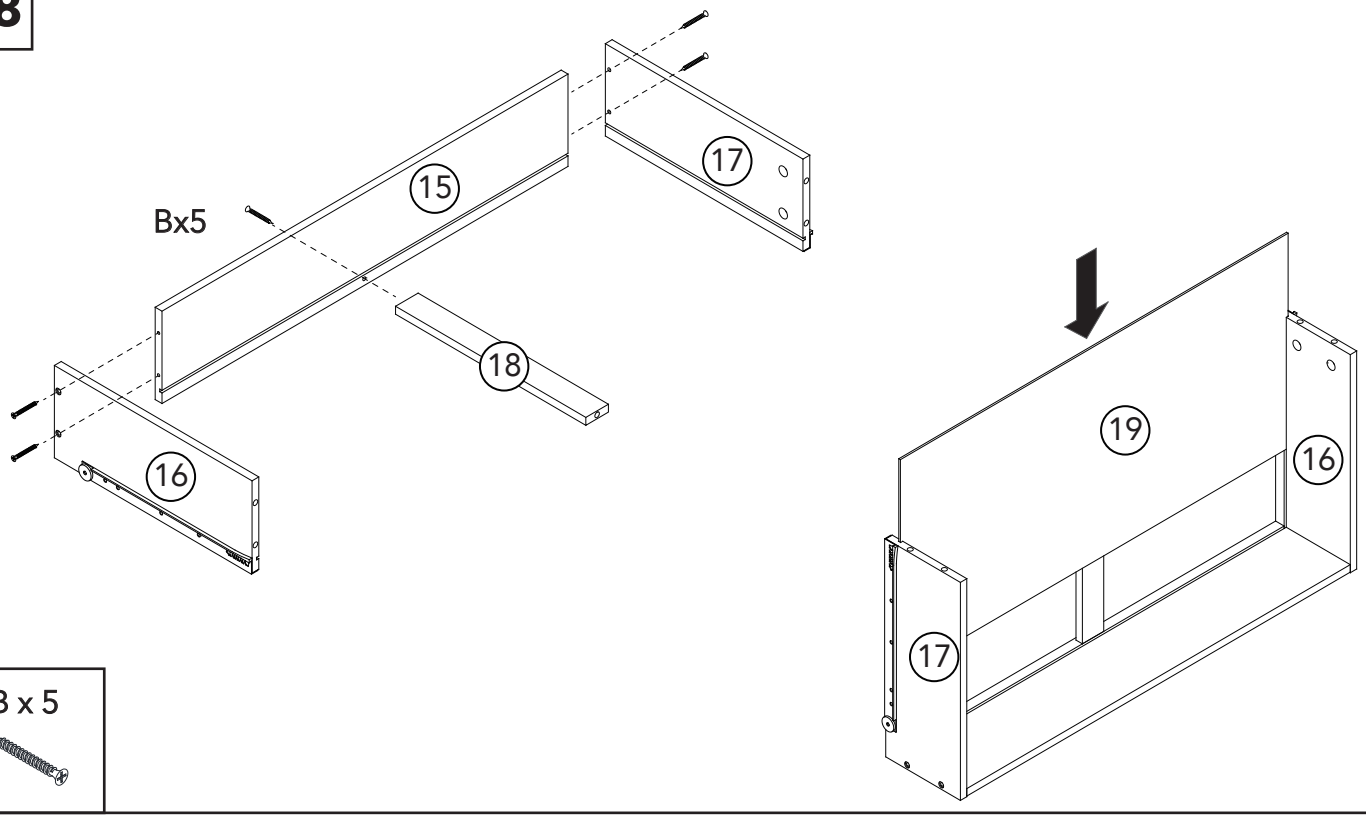

B x 5

19

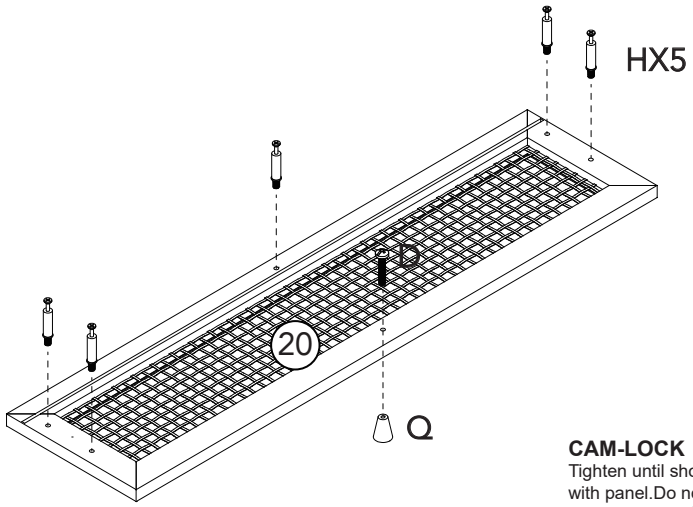

CAM-LOCK
Tighten until shoulder is flush with panel.Do not overtighten or undertighten(see example below)

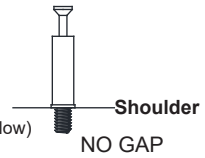

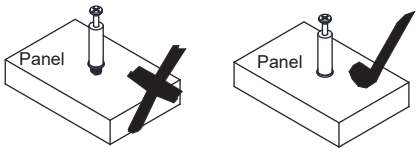

D x 1	H x 5	Q x 1

20

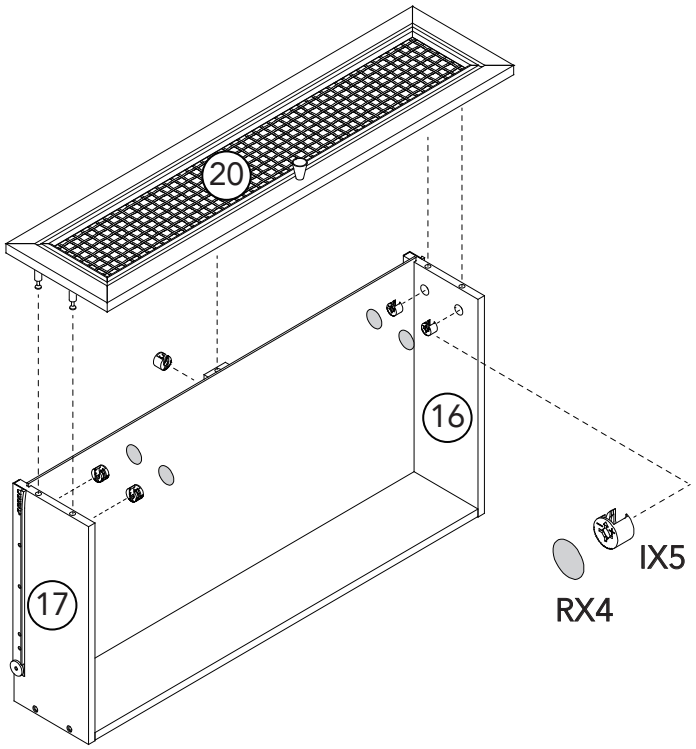
20
16
17
IX5
RX4

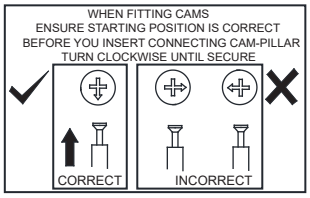
WHEN FITTING CAMS
ENSURE STARTING POSITION IS CORRECT
BEFORE YOU INSERT CONNECTING CAM-PILLAR
TURN CLOCKWISE UNTIL SECURE
CORRECT
INCORRECT

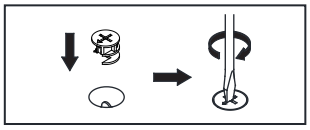

I x 5	R x 4

21

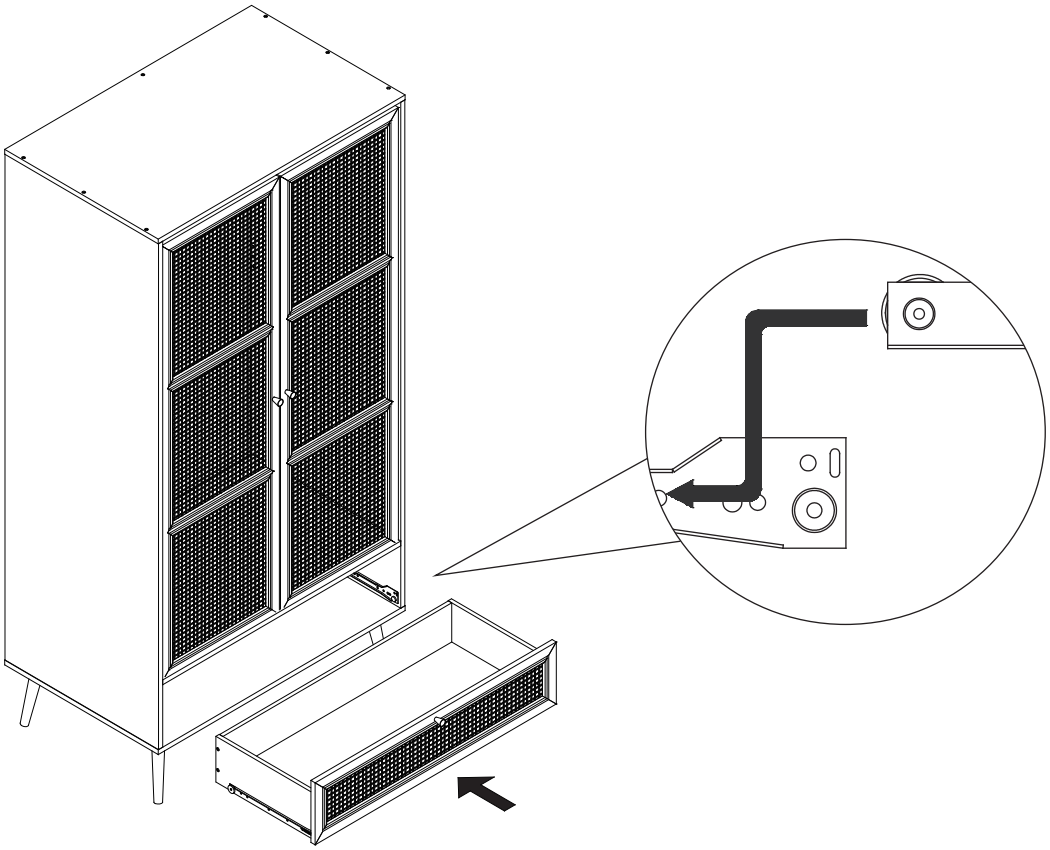

22

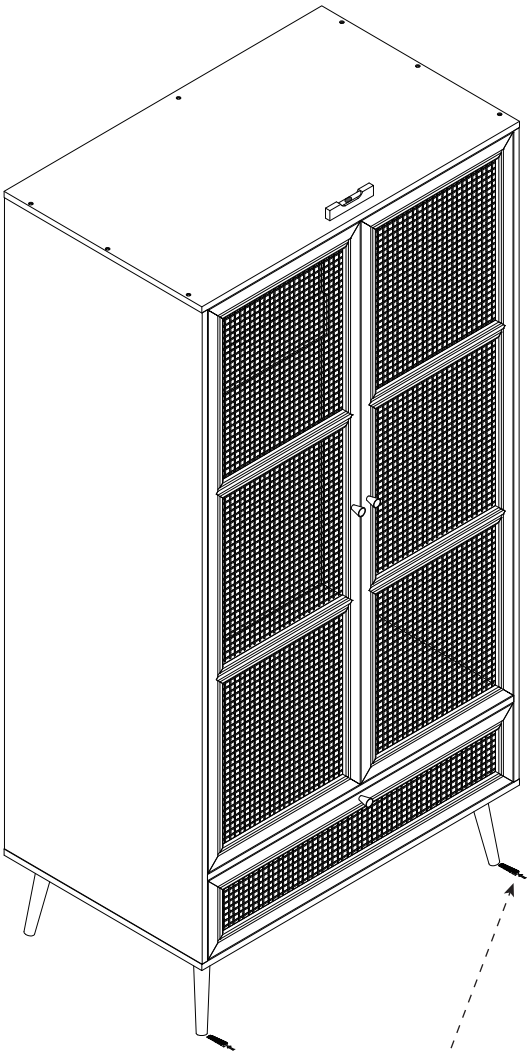

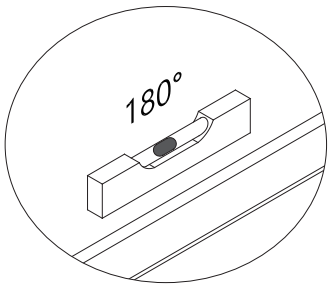

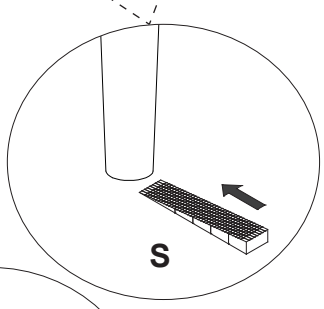

Please use the levellers provided if the floor surface is uneven

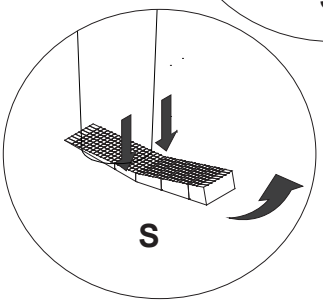

The excess leveller can be broken off freely

S x 2

Final product.

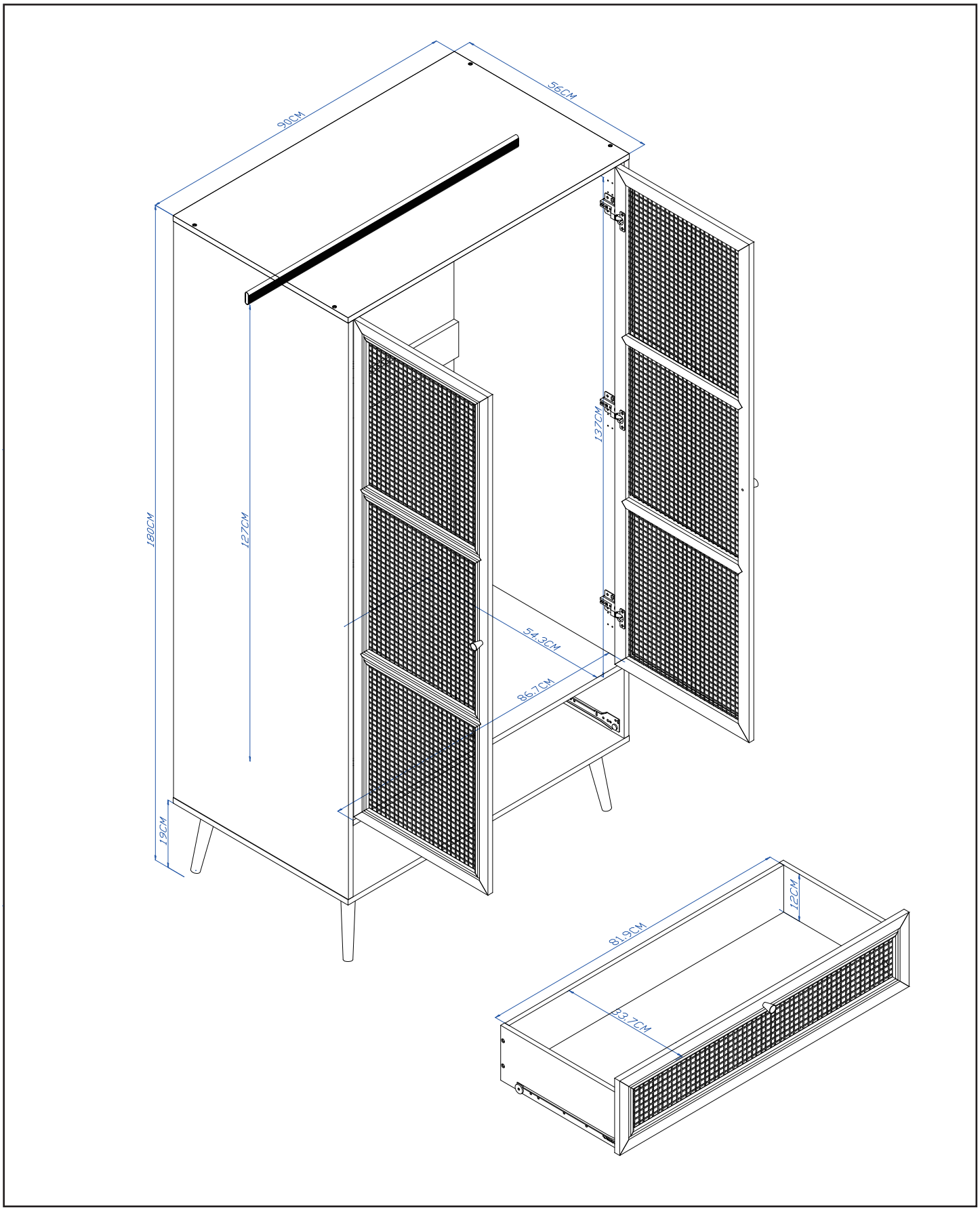

General furniture care.

- Uneven floors could give the impression that doors are out of alignment or that the furniture is wobbly. Be aware of this and compensate, if necessary, by adjusting the hinges or packing a corner to level the item. Please refer to the assembly instructions and adjust accordingly.
- If your furniture becomes stained, scratched, chipped or suffers other damage, we recommend professional help is sought to restore it. Please contact our customer services line for recommended agents.
- **DO** move items such as ornaments or coasters around periodically to allow the colour to mellow evenly.
- **DO** use mats and coasters to protect the surface from heat, liquids, or items that may cause scratches.
- **DO** ensure plastic or felt feet protectors are securely fitted into place on the feet and legs to avoid scratches.
- **DO** check fittings and fixings from time-to-time and tighten when necessary. Stop using the product if still unstable after all screws and bolts are tightened.
- **DO NOT** drag your furniture when moving it as this can damage joints. Always lift furniture into place.

Specific material care.

Foil Care

- **DO** avoid water or other liquids contacting scratches or chips as this can cause the surface to bubble and lift.
- **DO** only clean using a damp cloth and mild detergent. Aim to dust weekly with a soft, lint-free cloth or duster to prevent any build up of dirt.
- **DO** remove any spills immediately to avoid staining.
- **DO NOT** place directly in front of heat sources such as radiators or fires as timber can be affected by temperature and humidity which may cause cracking and warping.
- **DO NOT** in direct sunlight, as this will cause the colour to change quickly.
- **DO NOT** use bleach or abrasive cleaners.
- **DO NOT** use too much water when cleaning, the cloth should just be slightly damp.
- **DO NOT** use abrasive polish or silicon-based polishes as these can affect the finish over time.

Customer service.

If you have any issues with this product, you can call our Customer Service team on:
0345 165 6565 Monday to Friday 9am to 5:00pm.

Alternatively, you can contact our team by Live Chat on: Dunelm.com
Monday to Friday 8am – 8:30pm
Saturdays 8am – 5:30pm
Sundays and bank holidays 9am – 4:30pm.

www.dunelm.com

Dunelm (Soft Furnishings) Ltd. LE7 1AD
& Dunelm (Soft Furnishings) Holdings
Ltd. Dublin D12 WR25