Bryant Coffee Table

Assembly & Care Instructions

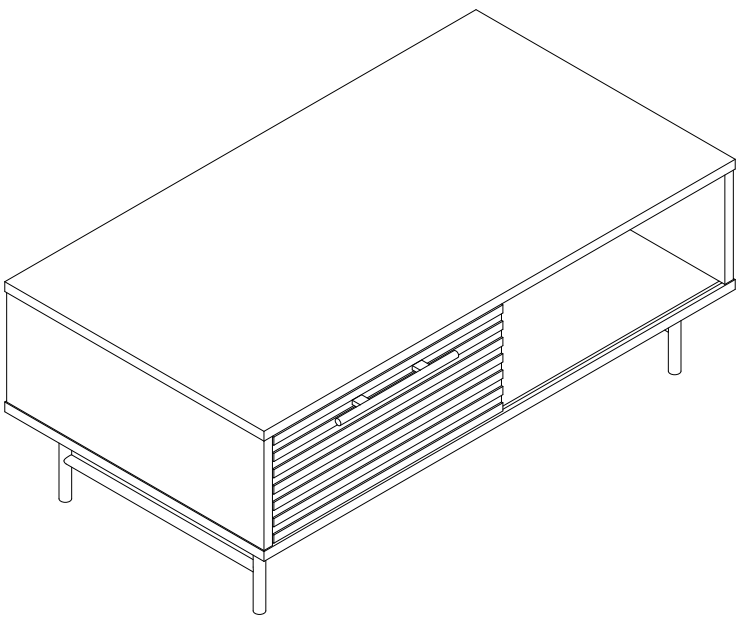

Dunelm

www.dunelm.com

Getting Started.

1. Check you have received all parts listed on the component and hardware pages and the correct quantity of each. Beware that sometimes parts are packaged within the product so not immediately visible after opening. Please check the assembly section for more details. If anything is missing, stop assembling the product and contact our customer service team.
2. Check all parts are intact and undamaged. Any issues, stop assembling the product and contact our customer service team.
3. Check you have the right tools for the job. Required tools which are not provided are listed below. If you are unsure of how to use these tools, please contact a professional tradesperson. We recommend Airtasker as an easy way to find trades people in your local area.

Tools required which are not included		
Flat head screwdriver	Cross head screwdriver	Spirit level
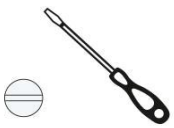		

Safety advice.

Dear Customer

- **IMPORTANT** – The first step you need to take is to ensure your safety! Please take the time to read and understand these instructions before assembling the product.
- Please keep these instructions for future reference.
- This item is intended for indoor use only – unless otherwise specified. Avoid exposure to humid conditions.
- Assembly to be carried out by a competent adult only.
- During assembly children should be kept away from the product due to possible risk of injury. The product may contain small parts that could also cause choking if swallowed.
- Products can be dangerous if incorrectly installed or assembled. Assembly should be carried out by a competent person and instructions followed. No liability will be accepted for damage or injury caused by incorrectly installed or assembled products.
- Never use an electric drill to assemble a product, as this can cause damage to parts.
- Regularly check all fastenings to ensure that they are properly tightened.
- Restrain children from climbing or playing on or around the product. Always consider where products are positioned to ensure children cannot get access to long cords or windows.
- Some products will be supplied with anti – tip kits which should always be used to secure the product to the wall and prevent tipping.
- Keep all plastic wrapping materials away from babies and children to avoid danger of suffocation.
- Ensure that all packaging is disposed of carefully and responsibly. Please recycle where possible.
- Once items are part or fully assembled, they are not returnable unless faulty.

Max weight limit	No. of people to assemble	Assembly difficulty	Time to assemble
35 KG	2 recommended	Medium	30 mins-1 hour

Parts supplied.

Ref	Part	Visual	Qty
1	Partitional panel (96x20.3x1.2cm)	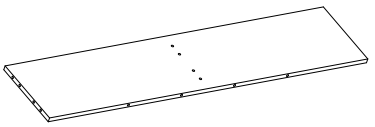	**1**
2	Partitional panel (24.5x20.3x1.2cm)	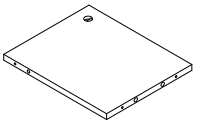	**1**
3	Partitional panel (24.5x20.3x1.2cm)	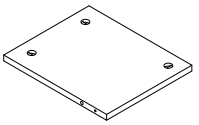	**1**
4	Side panel (54.6x20.3x1.8cm)	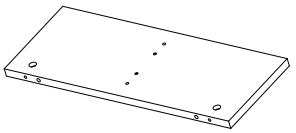	**2**
5	Base panel (100x55x1.8cm)	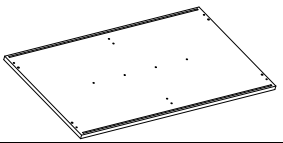	**1**
6	Metal leg frame (45x16x1.9cm)	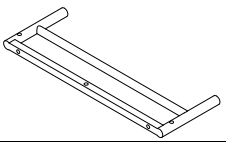	**2**
7	Metal bar (ϕ 1.6x86.7cm)		**2**
8	Metal bar (86.2x1.6x1.6cm)	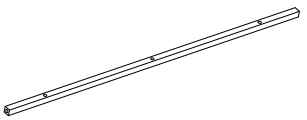	**1**
9	Top panel (100x55x1.8cm)	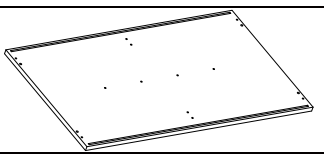	**1**
10	Door panel (48.6x19.5x1.8cm)	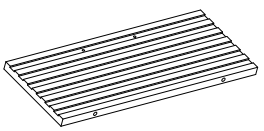	**2**

Hardware supplied.

Ref	Hardware & dimension (mm)	Qty
C	Wooden Dowel M8x30mm	**8**
D	Wooden Dowel M6x30mm	**12**
E	Screw M5x50mm	**8**
F	Wooden Dowel M6x50mm	**2**
I	Bolt M6x35mm	**6**
J	Bolt M6x25mm	**7**
M	Bolt M4x38mm	**4**

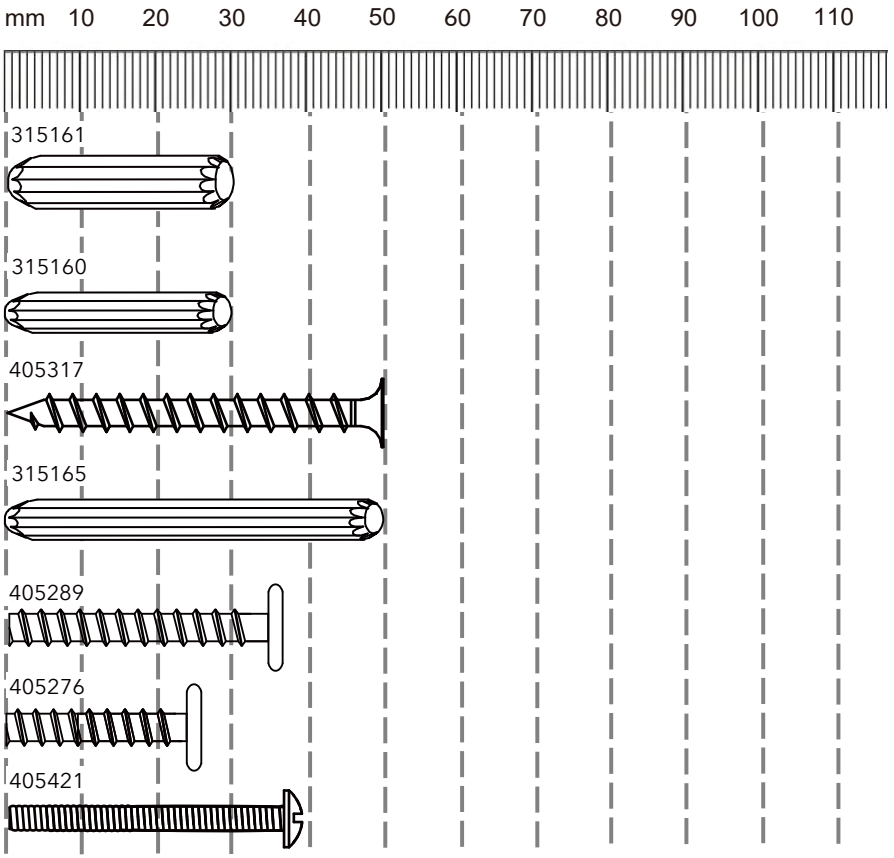

Ref	Dimensions	Visual	Qty
A	7x39mm	405017	**12**
B	15x9.6mm	405448	**14**
G	N/A	405612 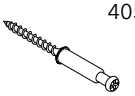	**2**
H	N/A	406362	**1**

Ref	Dimensions	Visual	Qty
K	N/A	407130	**8**
L	N/A	404233 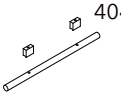	**2**
N	N/A	408182 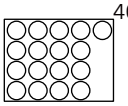	**14**

Exploded diagram.

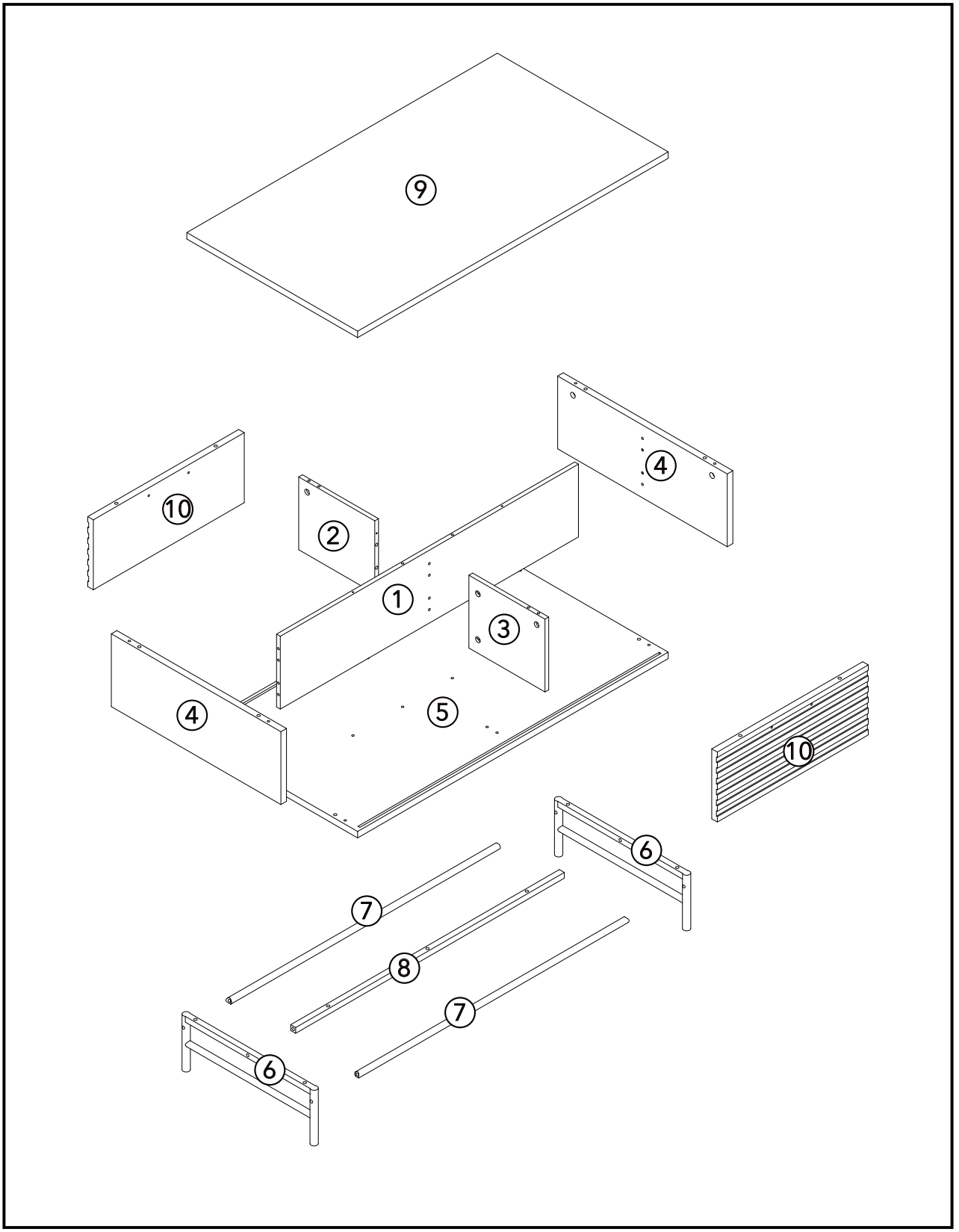

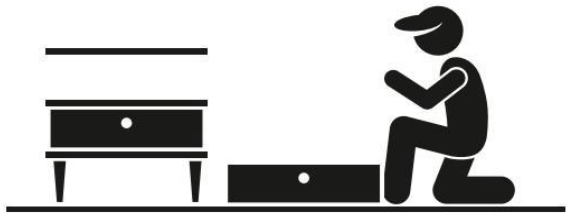	**ALWAYS** lay each panel down on a clean and level area, ideally in the room of intended use, ensuring there is enough room to maneuver around the item.
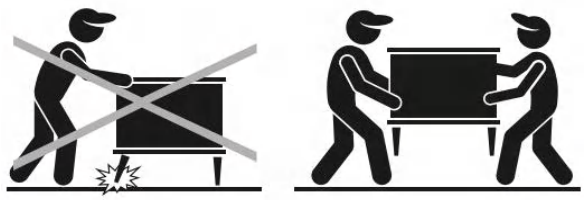	**NEVER** pull furniture into place as this causes damage to the internal structure and feet fixings. Always lift to move.
	NEVER flip your upholstery allowing corners to hit the floor as structural damage can be caused. Always turn gently.

1

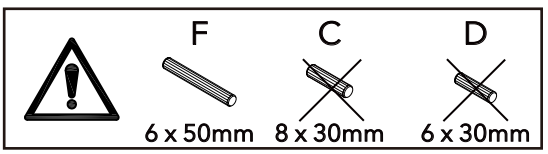

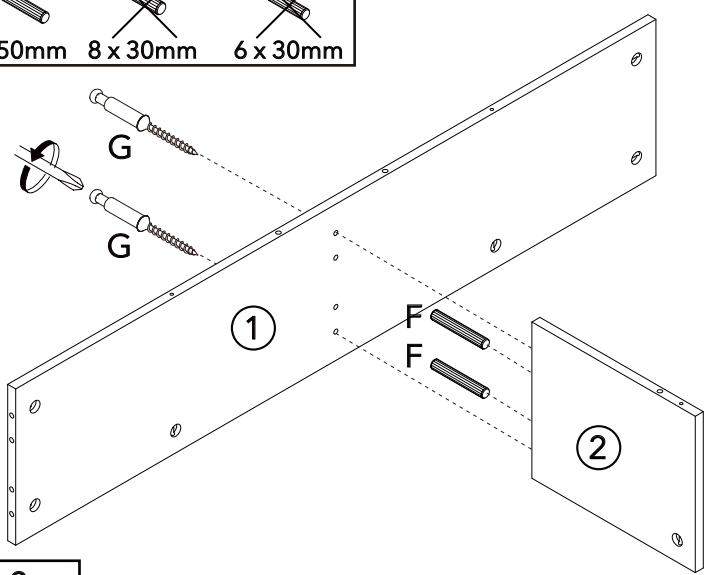

F x 2	G x 2

2

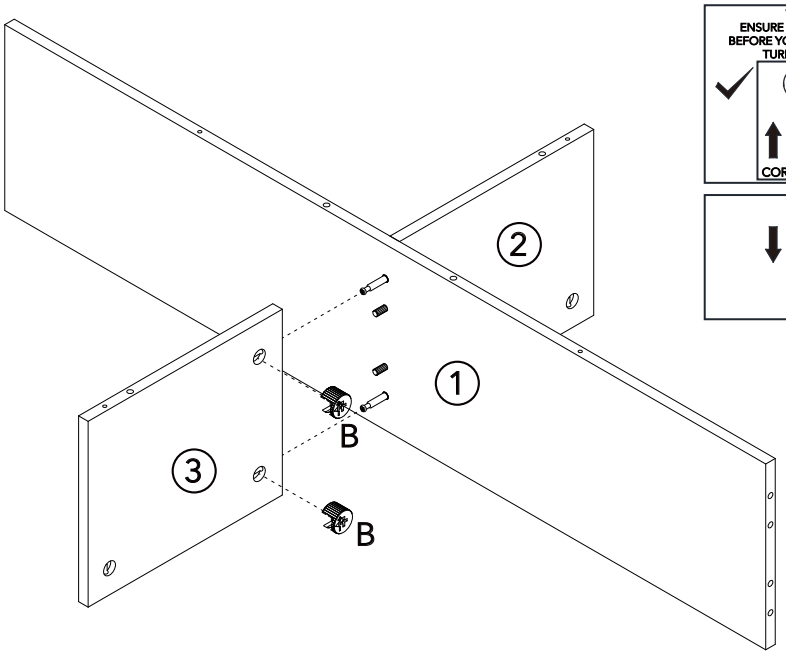

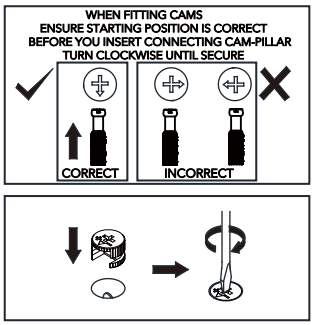

B x 2

3

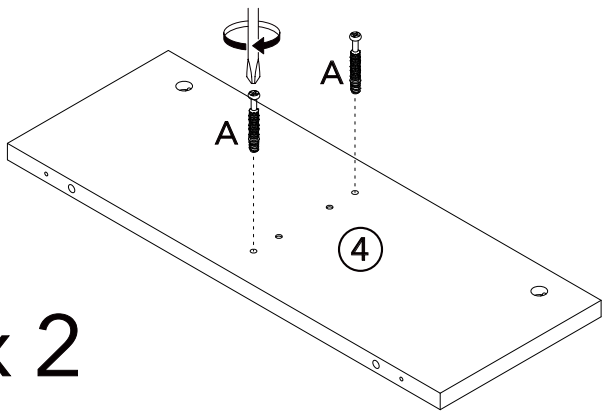

x 2

CAM-LOCK
Tighten until shoulder is flush with panel.Do not overtighten or undertighten(see example below)

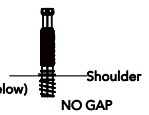

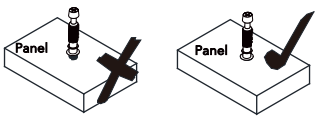

A x 4

4

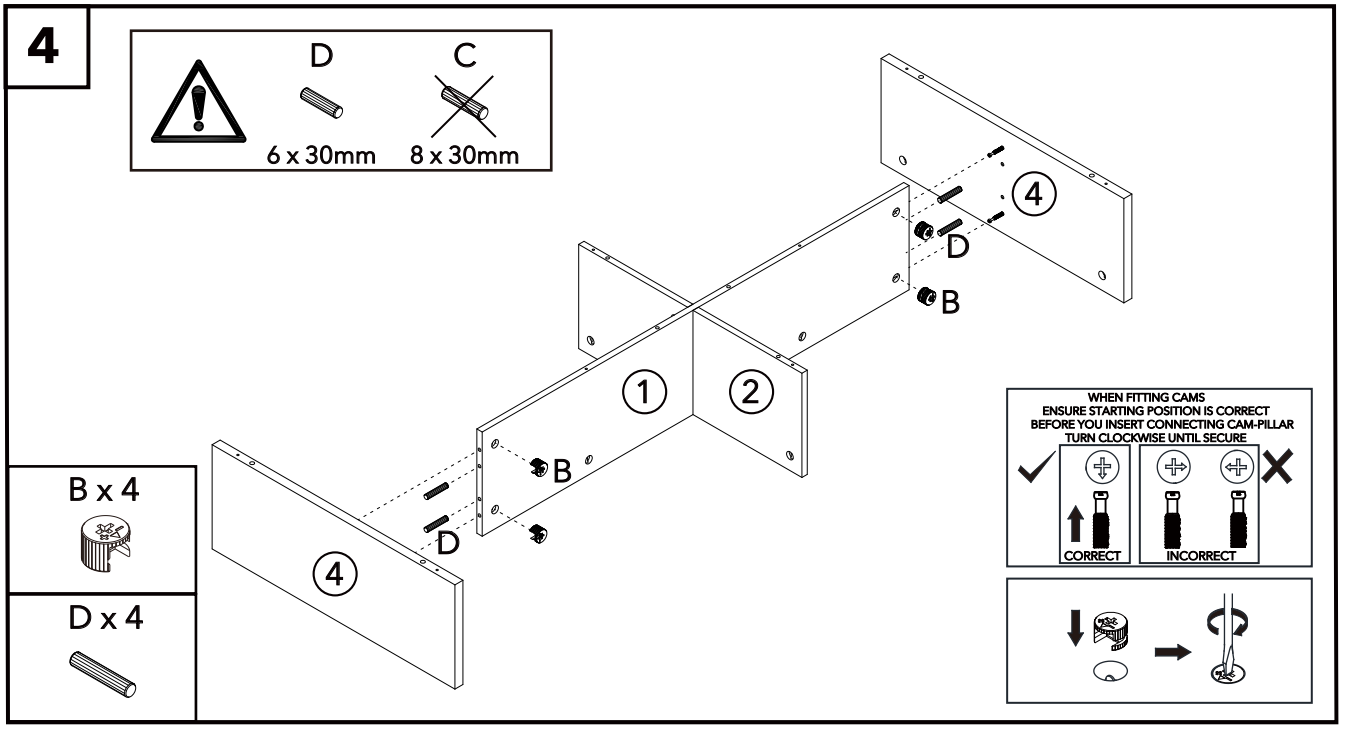
D
6 x 30mm
C
8 x 30mm
4
D
B
1
2
B
D
4
WHEN FITTING CAMS
ENSURE STARTING POSITION IS CORRECT
BEFORE YOU INSERT CONNECTING CAM-PILLAR
TURN CLOCKWISE UNTIL SECURE
CORRECT
INCORRECT
B x 4
D x 4

5

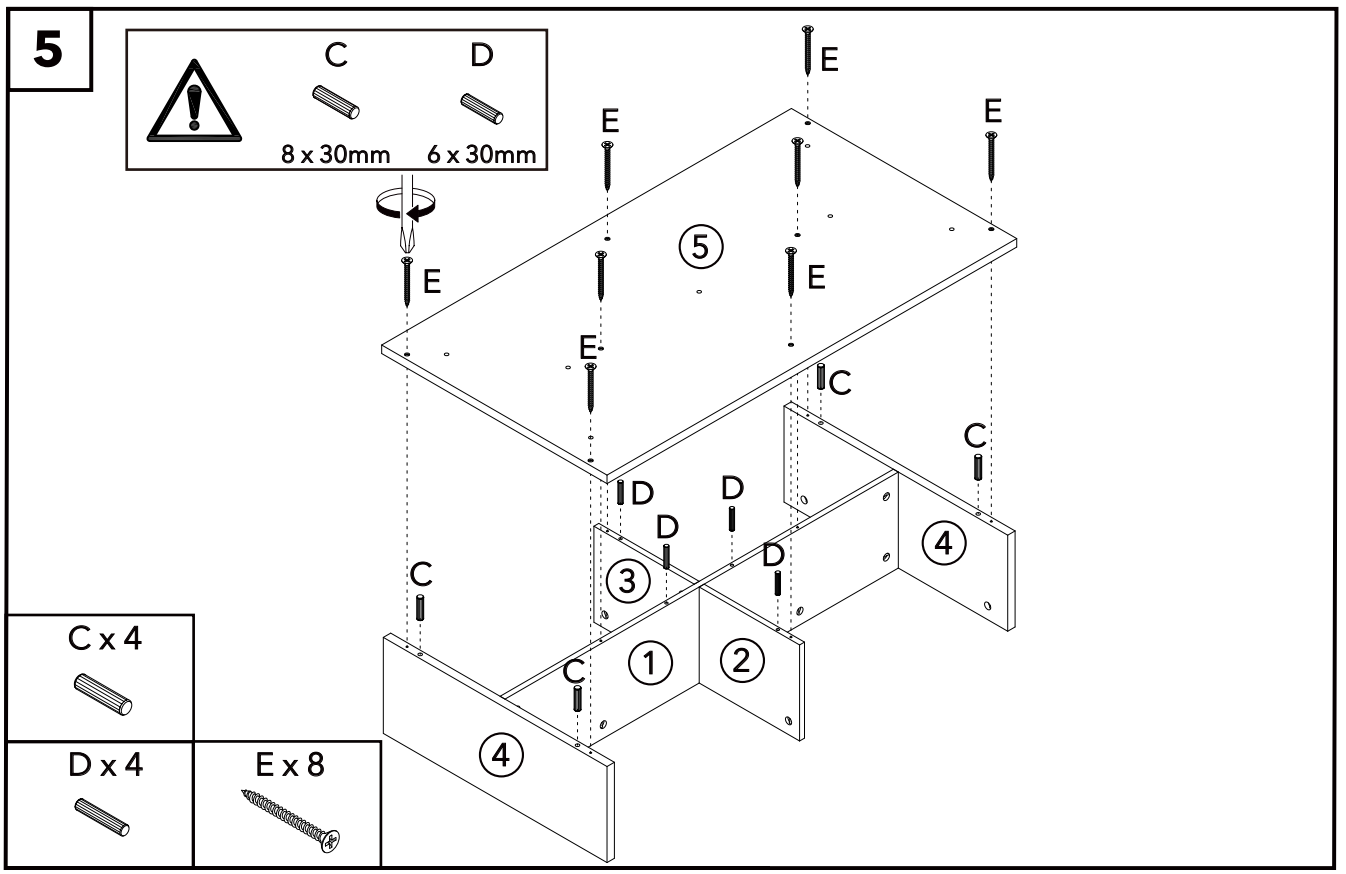
C
8 x 30mm
D
6 x 30mm
E
E
E
5
E
E
E
C
C
D
D
D
D
4
3
C
1
2
C
4
C x 4
D x 4
E x 8

6

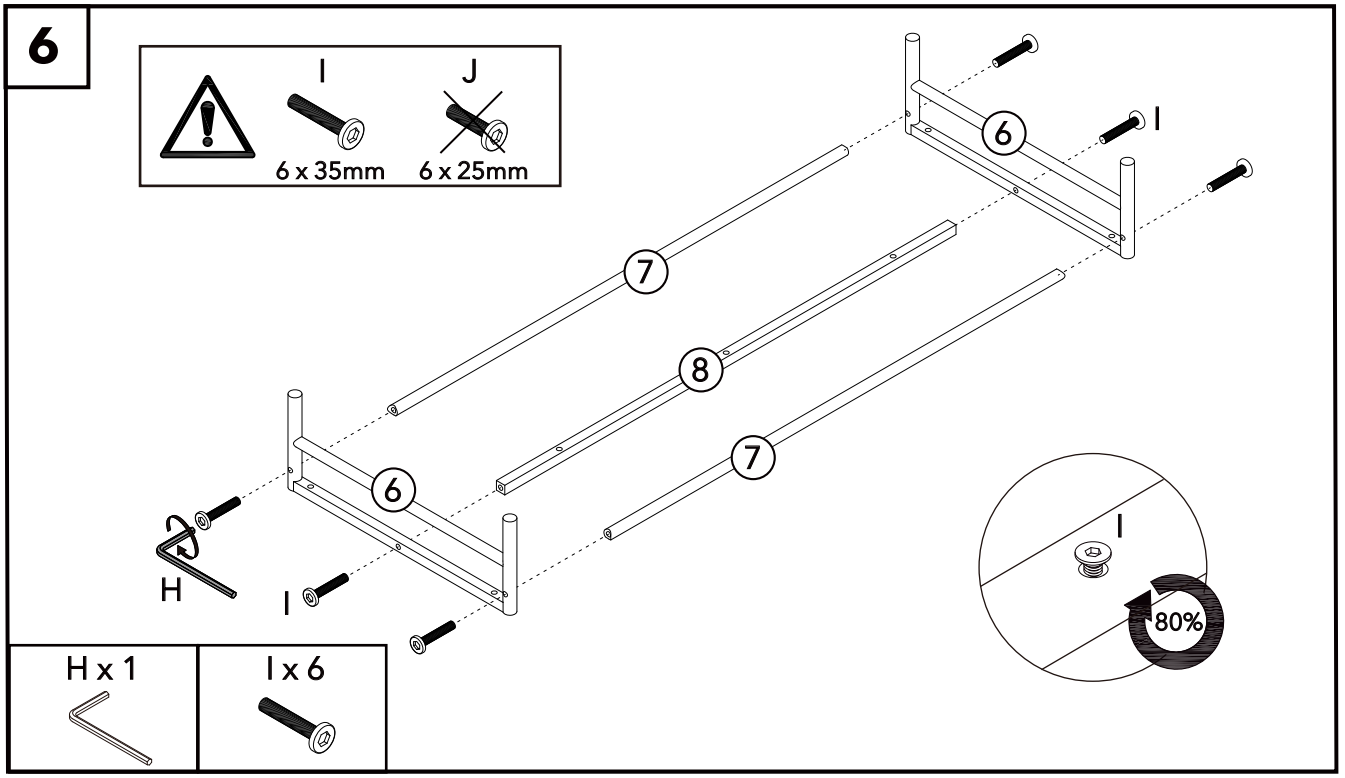
I
J
6 x 35mm
6 x 25mm
6
I
7
8
7
6
H
I
I
80%
H x 1
I x 6

7

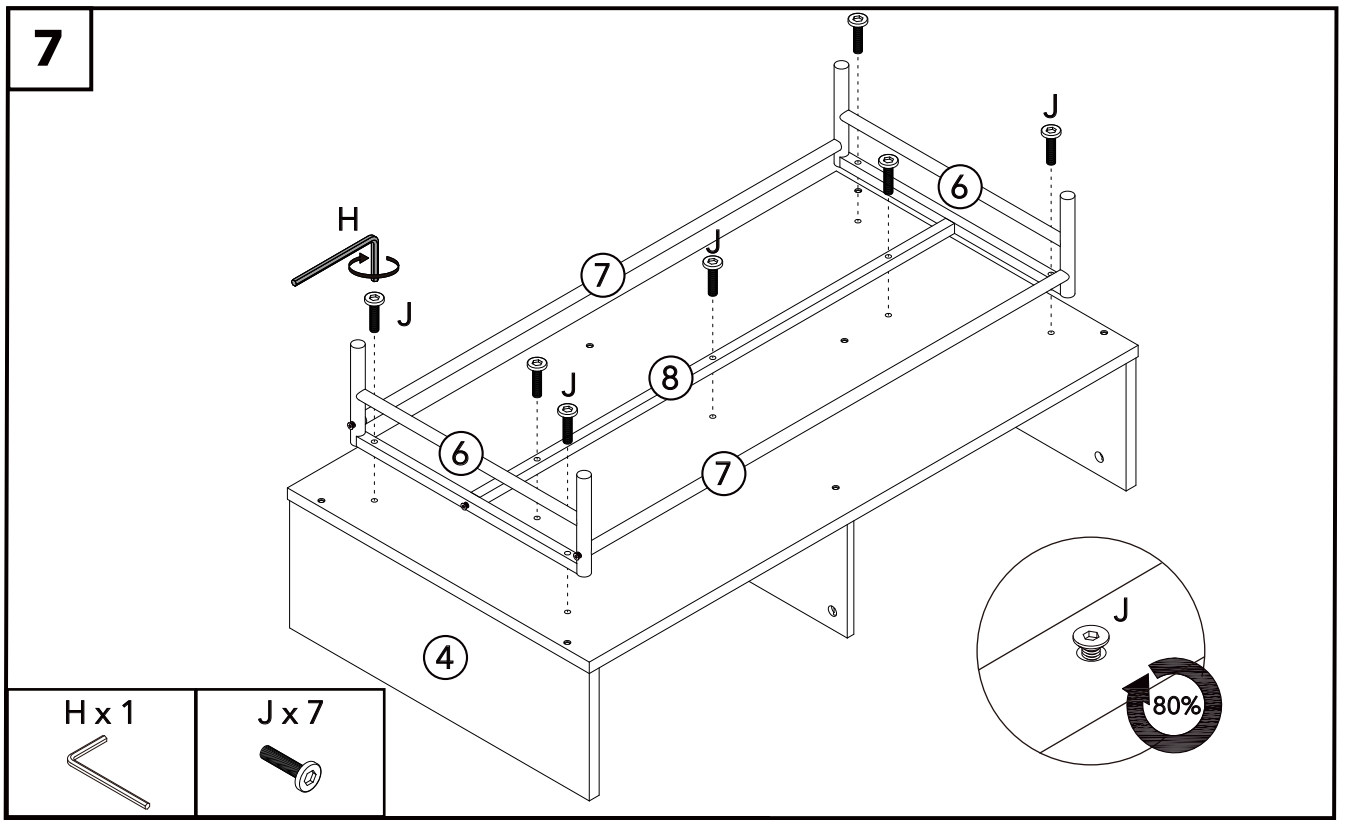
J
6
H
J
7
J
J
8
6
7
4
J
80%
H x 1
J x 7

8

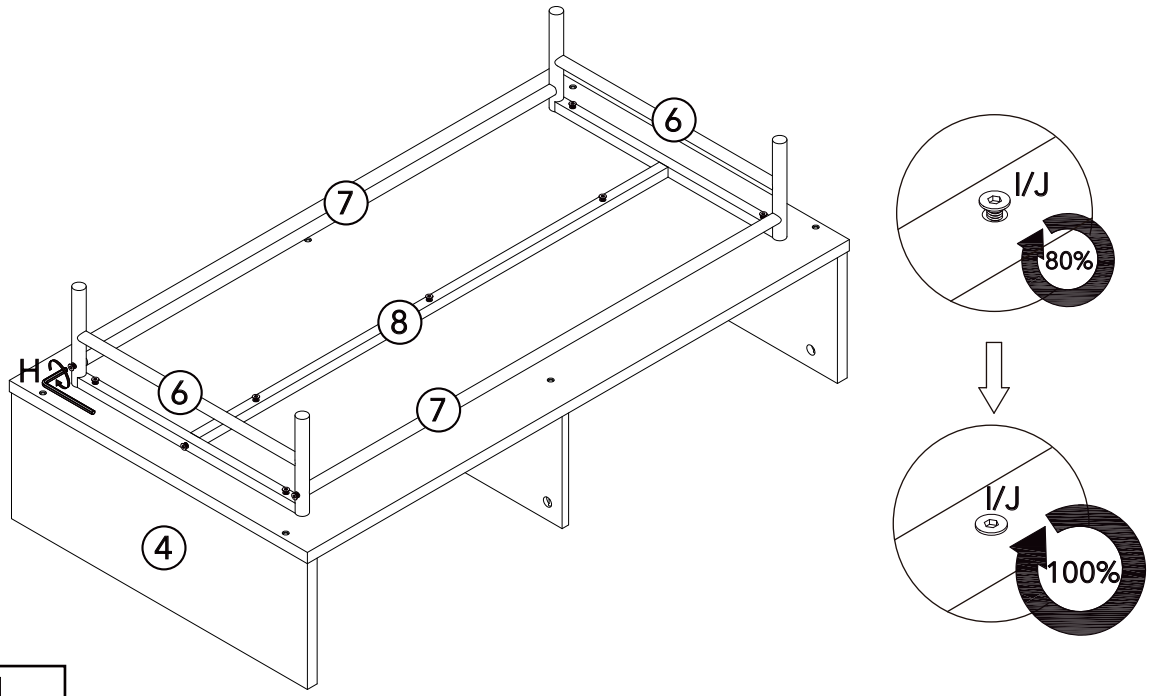

H x 1

9

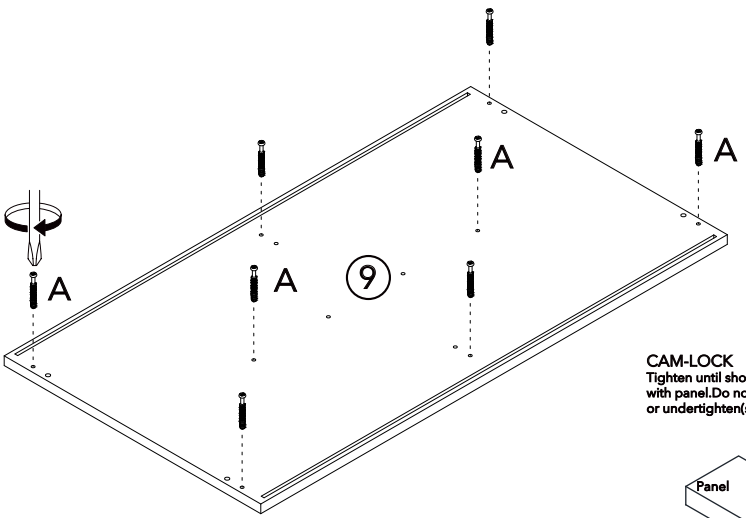

CAM-LOCK
Tighten until shoulder is flush with panel.Do not overtighten or undertighten(see example below)

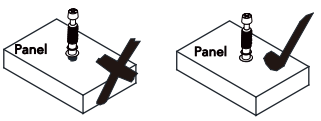

A x 8

10

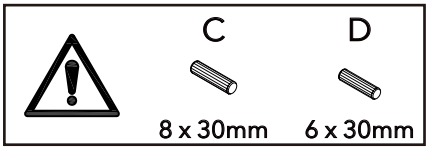

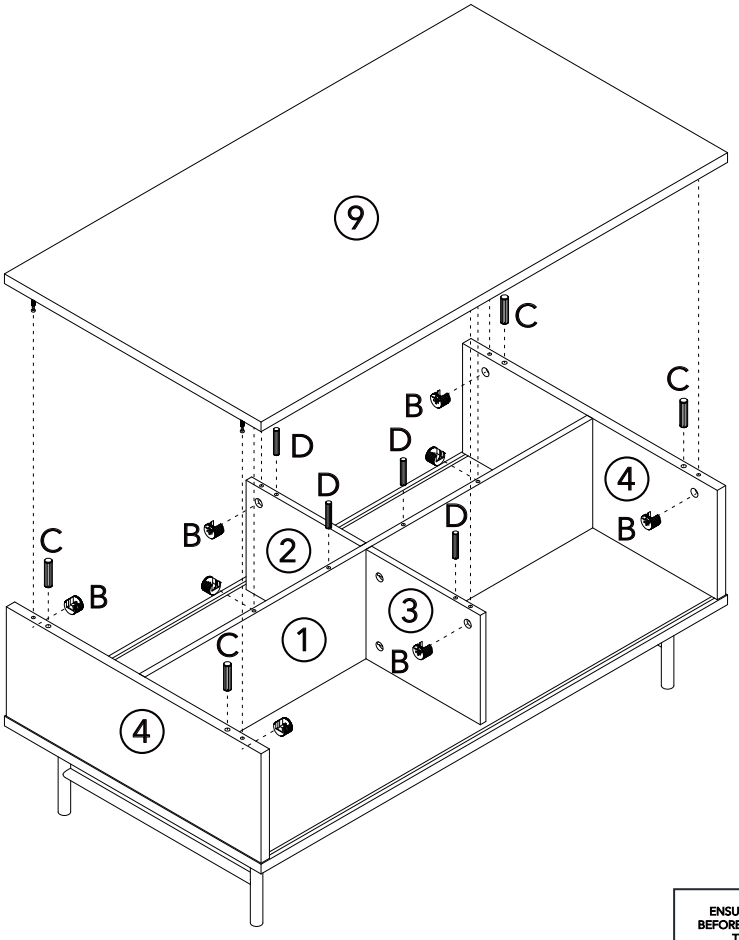

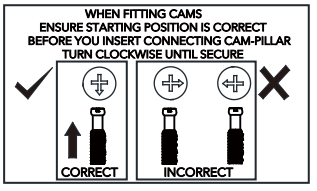

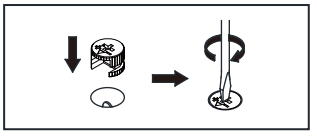

B x 8	C x 4	D x 4

11

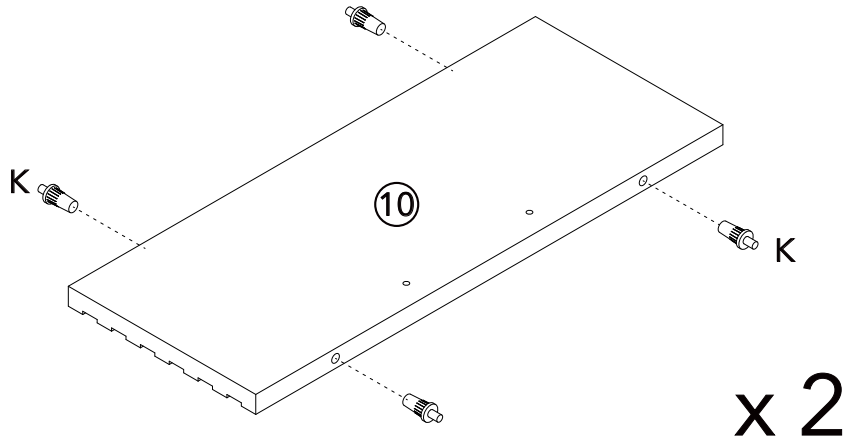

K x 8

12

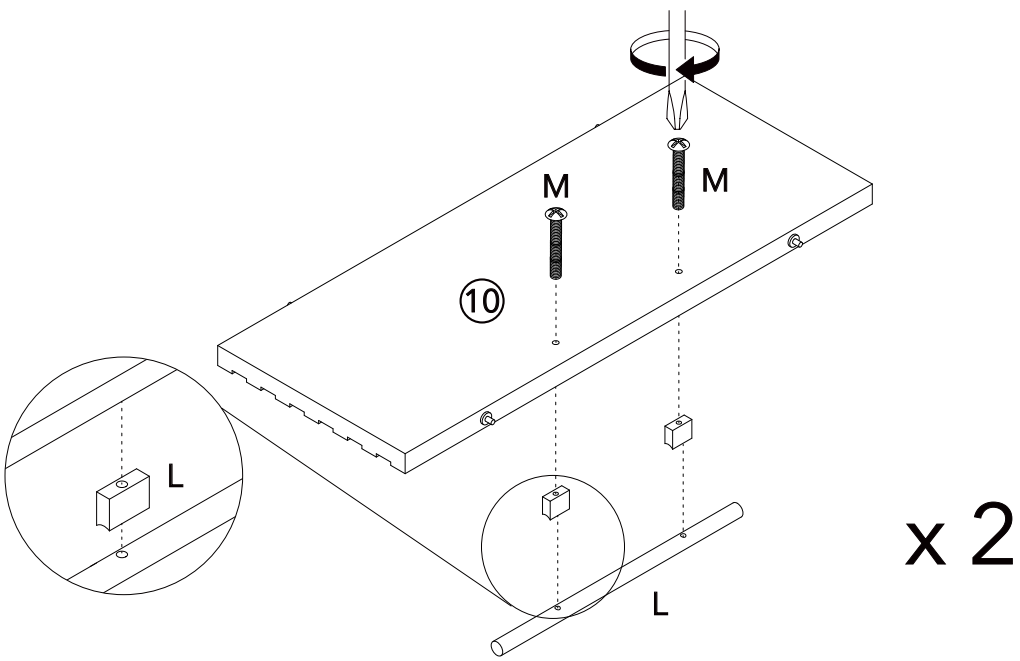

M x 4

L x 2

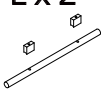

13

1.Use stickers (N) on all visible holes.

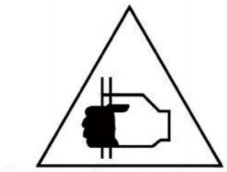

Warning: Beware of Pinching

Step 13-1

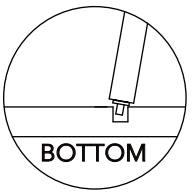

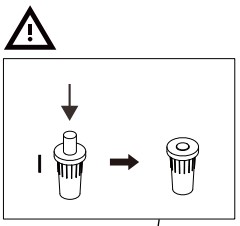

Step 13-2

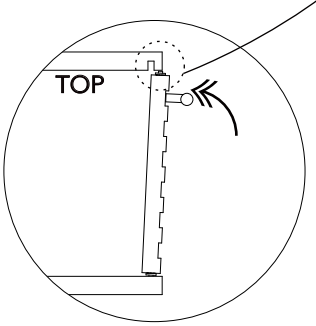

Step 13-3

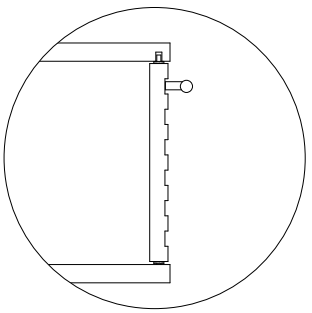

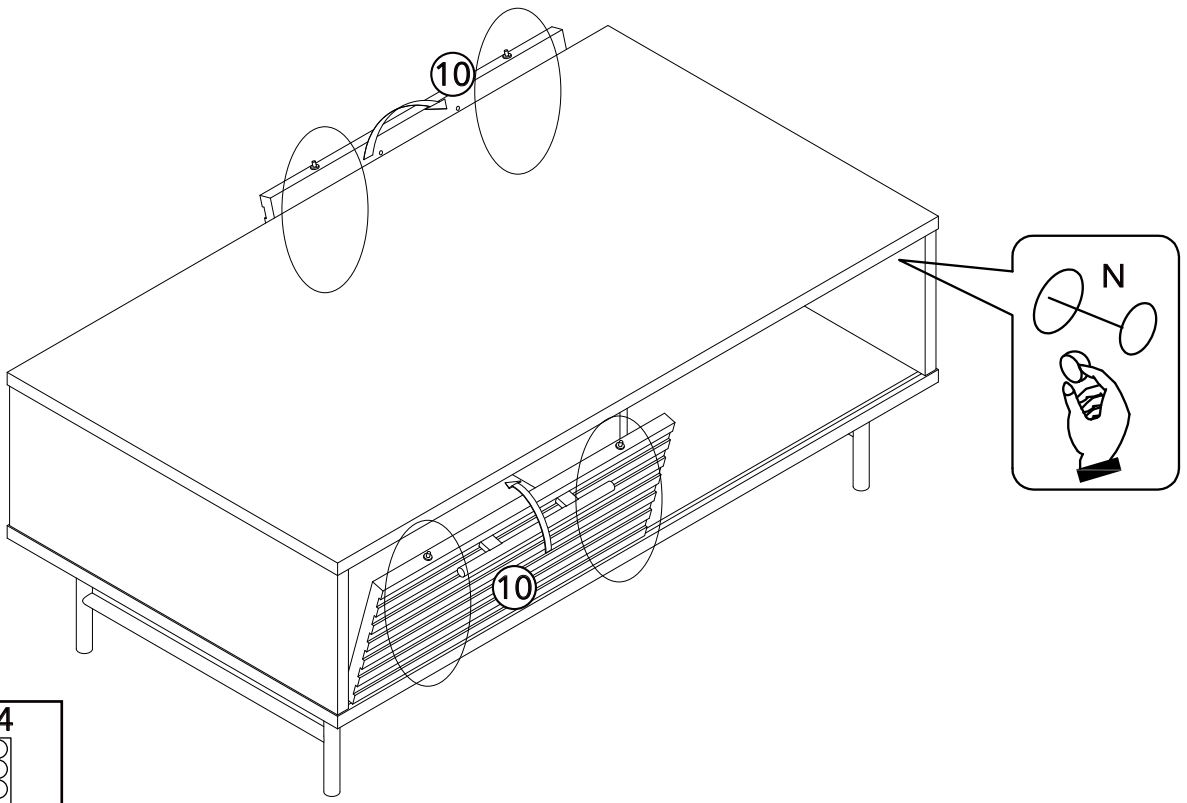

N x 14

Final product.

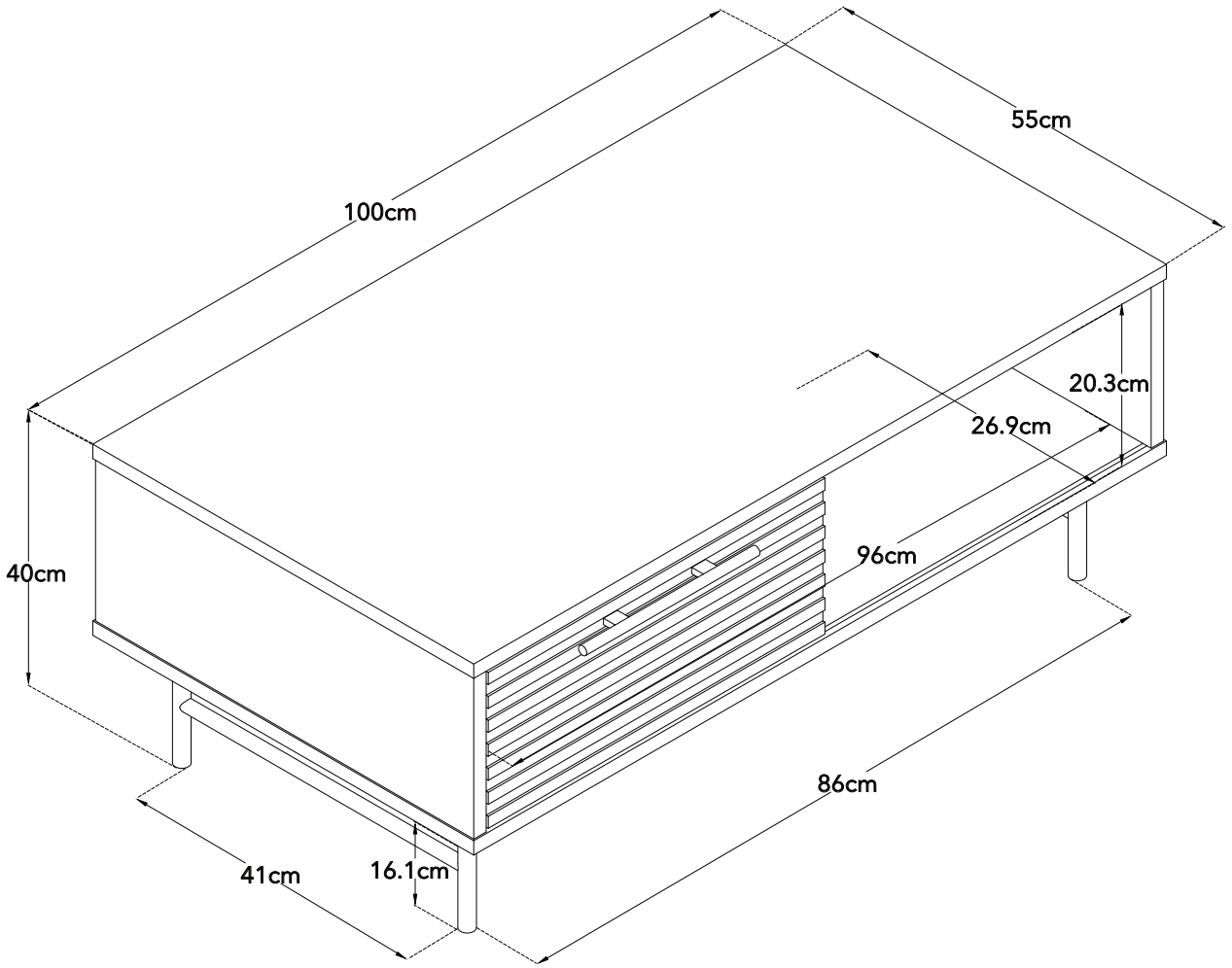

General furniture care.

- Uneven floors could give the impression that doors are out of alignment or that the furniture is wobbly. Be aware of this and compensate, if necessary, by adjusting the hinges or packing a corner to level the item. Please refer to the assembly instructions and adjust accordingly.
- If your furniture becomes stained, scratched, chipped or suffers other damage, we recommend professional help is sought to restore it. Please contact our customer services line for recommended agents.
- **DO** move items such as ornaments or coasters around periodically to allow the colour to mellow evenly.
- **DO** use mats and coasters to protect the surface from heat, liquids, or items that may cause scratches.
- **DO** ensure plastic or felt feet protectors are securely fitted into place on the feet and legs to avoid scratches.
- **DO** check fittings and fixings from time-to-time and tighten when necessary. Stop using the product if still unstable after all screws and bolts are tightened.
- **DO NOT** drag your furniture when moving it as this can damage joints. Always lift furniture into place.

Specific material care.

Foil Care

- **DO** avoid water or other liquids contacting scratches or chips as this can cause the surface to bubble and lift.
- **DO** only clean using a damp cloth and mild detergent. Aim to dust weekly with a soft, lint-free cloth or duster to prevent any build up of dirt.
- **DO** remove any spills immediately to avoid staining.
- **DO NOT** place directly in front of heat sources such as radiators or fires as timber can be affected by temperature and humidity which may cause cracking and warping.
- **DO NOT** in direct sunlight, as this will cause the colour to change quickly.
- **DO NOT** use bleach or abrasive cleaners.
- **DO NOT** use too much water when cleaning, the cloth should just be slightly damp.
- **DO NOT** use abrasive polish or silicon-based polishes as these can affect the finish over time.

Customer service.

If you have any issues with this product, you can call our Customer Service team on:
0345 165 6565 Monday to Friday **9am to 5:00pm.**

Alternatively, you can contact our team by Live Chat on: **Dunelm.com**
Monday to Friday 8am – 8:30pm
Saturdays 8am – 5:30pm
Sundays and bank holidays 9am – 4:30pm.

www.dunelm.com

Dunelm (Soft Furnishings) Ltd. LE7 1AD
& Dunelm (Soft Furnishings) Holdings
Ltd. Dublin D12 WR25