2000W Upright/Flat Fan Heater

30699707

Installation & Care Instructions

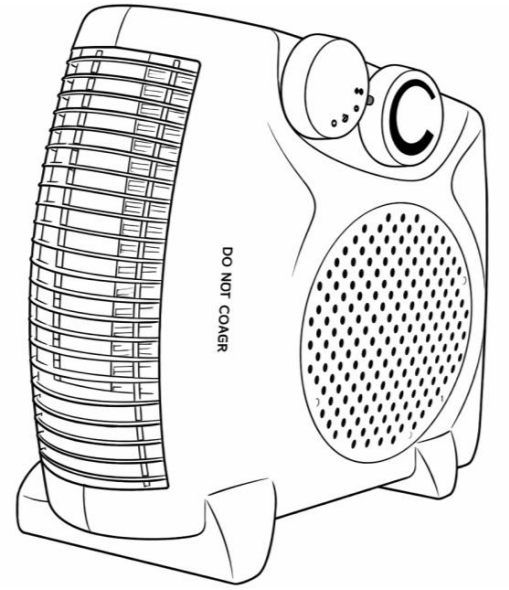

www.dunelm.com

Contents

Page No.	
2	Contents
3	Getting Started
3-5	Safety Advice
6	Parts Supplied
6	Description of Parts
7	Before first use of your Fan Heater
7	Operating Instructions – Heat Setting
7	Setting the Correct Temperature
7	Fan Only Mode
8	Care and Use of Your Fan Heater
8	Safety Cut-Out
8	Electrical Rating
8	Non-Rewireable Mains Plug
9	ErP Data
10	Recycling
10	Customer Service
11	Guarantee

Getting Started

1. Check you have received all the parts as detailed in the parts supplied section. Beware that sometimes parts are packaged within the product/packaging so not immediately visible after opening.
2. Check that the product is intact, undamaged and all parts present. Any issues, stop and contact our customer service team.
3. When using electrical appliances, basic safety precautions should always be followed.
4. Only use the product as described in this user manual. Any other use is considered improper and may result in damage to property or persons. The manufacturer or vendor cannot be held liable for damages or injuries incurred through improper or incorrect use.

Safety Advice

Dear Customer

- **IMPORTANT** – The first step you need to take is to ensure your safety! Please take time to read and understand these instructions before using the product.
- Please keep these instructions for future reference.
- **WARNING!** To avoid overheating, **DO NOT COVER** the heater.
- **WARNING!** To reduce the risk of fire, keep textiles, curtains, or any other flammable material a minimum distance of 1m from the air outlet.
- **DO NOT** locate the appliance immediately below an electrical socket outlet.
- **DO NOT** use this heater with a programmer, timer, separate remote-control system or any other device that switches the heater on automatically, since a fire risk exists if the heater is covered or positioned incorrectly.
- **DO NOT** use this heater with an extension cable.
- Check that the voltage indicated on the data plate corresponds with that of the local network before connecting the appliance to the mains power supply.
- Close supervision is required when using this appliance near children.
- **DO NOT** leave this appliance within reach of children.
- This appliance can be used by children aged from 8 years and above and persons with reduced physical, sensory or mental capabilities or lack of experience and knowledge if they have been given supervision or instruction concerning use of the appliance in a safe way and understand the hazards involved. Children shall not play with the appliance. Cleaning and user maintenance shall not be made by children unless they are older than 8 years and supervised.
- Children of less than 3 years should be kept away unless continuously supervised.
- Keep the appliance and its cord out of reach of children aged less than 8 years

- Children aged from 3 years, and less than 8 years, shall only switch on/off the appliance provided that it has been placed or installed in its intended normal operating position and they have been given supervision or instruction concerning use of the appliance in a safe way and understand the hazards involved.
- Children aged from 3 years, and less than 8 years shall not plug in, regulate and clean the appliance or perform user maintenance
- **WARNING!** Some parts of this product can become very hot and cause burns. Particular attention has to be given where children and vulnerable people are present.
- **DO NOT** use this heater in the immediate surroundings of a bath, a shower or a swimming pool.
- **DO NOT** use this heater in small rooms when they are occupied by persons not capable of leaving the room on their own, unless constant supervision is provided.
- **DO NOT** immerse the appliance or its cord in water or any other liquids.
- **DO NOT** leave the appliance unattended during use.
- **DO NOT** leave the appliance unattended whilst connected to the mains supply.
- Always use this appliance on a solid, level, heat resistant surface.
- **DO NOT** use this appliance outdoors.
- It is imperative to unplug the power cord after the appliance has been used, before it is cleaned and whilst being repaired.
- Repairs to electrical appliances should only be performed by a qualified electrician. Improper repairs may place user at serious risk.
- **DO NOT** operate this appliance with a damaged plug or cord, after a malfunction or after being dropped or damaged in any way.
- Regular, periodic checks should be carried out on the mains cable to ensure no damage is evident. Should there be any signs of damage the appliance should not be used.
- If the power cable is damaged, it should only be replaced by the manufacturer or a suitable qualified after-sales service in order to avoid a hazard
- **DO NOT** allow the mains cable to hang over sharp edges or come in contact with hot surfaces.
- **DO NOT** run the mains cable under carpets, rugs, etc.
- Allow the unit to cool before storage.
- Before cleaning, disconnect the appliance from the mains supply and allow to

cool. Never place the appliance near to flammable material or high pressure containers. E.g. Paper, wood, petrol, solvents, spray canisters.

- This appliance is intended for household use only and should not be used for industrial purposes.
- **DO NOT** use any accessories or attachments with this appliance other than those supplied or recommended by supplier.
- **DO NOT** push objects into any openings as damage to the appliance and/or electric shock may occur.
- The appliance should not be installed in areas which have a fire-risk, such as garages, stables or wooden sheds; this is applicable also for rooms in which highly inflammable gasses or dust can develop. Danger of fire!
- Unplug after each use. Grasp the plug, not the cord.

⚠ CAUTION

Keep Hearth Rugs and other soft furnishings away from the front of the heater. They could obstruct the free flow of air from the fan and damage both soft furnishings and heater.

The heater must stand on a solid, level non-flammable surface such as stone, slate, ceramic or concrete.
DO NOT Stand the heater on a carpet, rug or other soft floor covering.

DO NOT COVER THE HEATER

THIS FAN HEATER MUST ONLY BE OPERATED IN THE UPRIGHT POSITION.

This appliance has been ERP classified as a portable space heater and should only be used for supplementary, secondary or temporary heating. It should not be considered for primary permanent heating in a room or dwelling.

ℹ During the first few minutes of initial use, you may notice a slight odour and a little smoke. This is normal and will quickly disappear, It is the coating applied to the heating elements to prevent any corrosion during transit.

Parts Supplied

Fan Heater

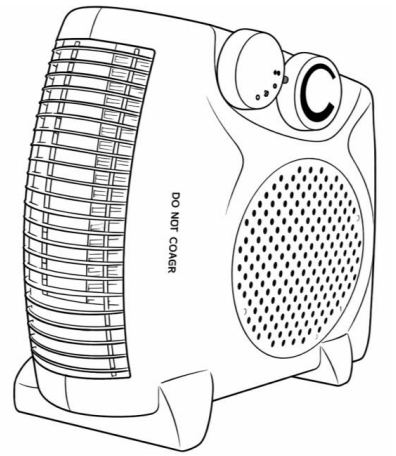

Description of Parts

1. Air Outlet
2. Power Control Dial
3. Power Indicator Light
4. Thermostat Control Dial
5. Air Intake
6. (Inset) Horizontal Mounting Position

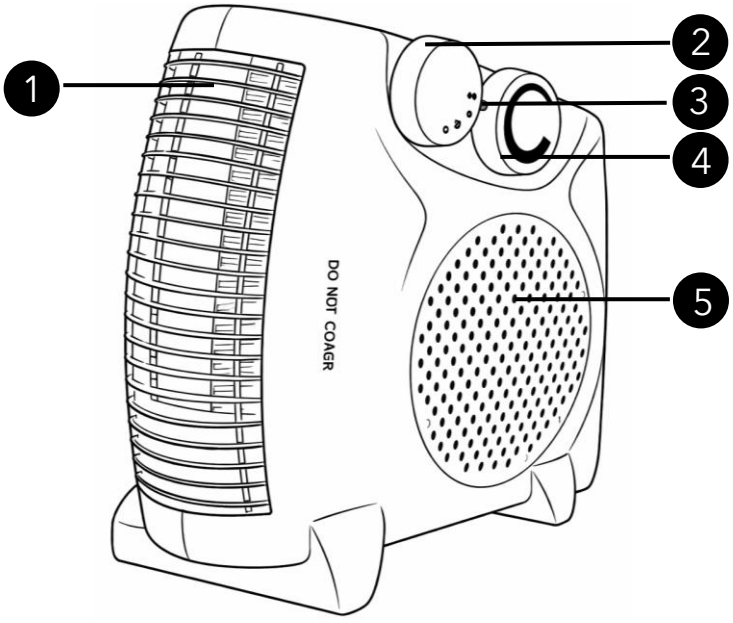

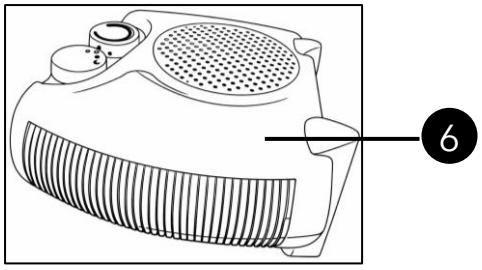

Before first use of your Fan Heater

Remove all packaging materials and discard responsibly.

Operating Instructions – Heat Setting

- Place the heater on a solid, level non-flammable surface in either the vertical or horizontal position.
- Ensure that the **Power Control Dial (2)** is in the off (O) position.
- Insert the mains plug into the mains socket.
- For the low heat setting, rotate the **Power Control Dial (2)** to the low heat position (●).
- For the high heat setting, rotate the **Power Control Dial (2)** to the high heat position (●●).
- Rotate the **Thermostat Control Dial (4)** clockwise to increase the room temperature and anticlockwise to decrease the room temperature as desired.

ℹ The **Power Indicator Light (3)** will illuminate and extinguish indicating that the set temperature is being maintained, this is quite normal.

- Return the **Power Control Dial (2)** to the (O) position to switch off the heater.

Setting the Correct Temperature

- Set the heater to the desired heat setting as above.
- Rotate the **Thermostat Control Dial (4)** to the maximum position and allow the room to warm up. Once the desired room temperature has been reached turn the **Thermostat Control Dial (4)** anticlockwise until the heater just clicks off then turn it back up clockwise very slightly. The **Thermostat Control Dial (4)** will now maintain the room temperature, if necessary, further increasing or decreasing the **Thermostat Control Dial (4)** may be required to 'fine tune' the ideal room temperature.
- Return the **Power Control Dial (2)** to the (O) position to switch off the heater.

Fan Only Mode

- Rotate the **Power Control Dial (2)** to the fan only position (✣) to enable the fan to operate for cool air output.

ℹ The **Thermostat Control Dial (4)** will need to be rotated to the fully clockwise position for the fan to operate effectively.

Care and Use of Your Fan Heater

Always disconnect the fan heater from the mains power supply and allow to cool before cleaning.
Clean outside of the heater with a clean damp cloth. Never clean with harsh or abrasive cleaners.
Do not submerge any part of the fan heater in water or any other liquids.
Do not wrap the mains cable around the appliance

Safety Cut-Out

⚠ **WARNING!** This appliance is fitted with a built in safety cut-out, if the cut-out is activated the unit stops working, unplug the heater from the mains and check that the air intake area is not blocked or covered.
Leave for an hour to cool and reset before plugging back into the mains.

Electrical Rating

220-240V~ 50Hz 1800-2000W
Model Number: 30699707
Protection Class: II
This equipment complies with Annex III of Commission Regulation (EU) 2023/826
ErP: Off mode power consumption is 0 W, which is within the permitted limit of 0.50 W in accordance with Commission Regulation (EU) 2023/826.

Non-Rewireable Mains Plug

If your appliance is supplied with a non-rewireable plug fitted to the mains lead and should the fuse need replacing, you must use an ASTA approved one (conforming to BS 1362 of the same rating). Never use a plug with the fuse cover missing. If in doubt, consult a qualified electrician.
If you need to remove the plug -**DISCONNECT FROM THE MAINS**- and then cut it off the mains lead and immediately dispose of it safely. Never attempt to reuse the plug or insert it into a socket outlet as there is a danger of electric shock.

Model identifier(s): 30699707						
Item	Symbol	Value	unit		Item	unit
Heat output					**Type of heat input, for electric storage local space heaters only (select one)**	
Nominal heat output	P_{nom}	1.8-2.0	kW		manual heat charge control, with integrated thermostat	[no]
Minimum heat output (indicative)	P_{min}	1.000	kW		two or more manual stages, no room temperature control	[no]
Maximum continuous heat output	$P_{max,c}$	2.000	kW		with mechanic thermostat room temperature control	[yes]
Power consumption					with electronic room temperature control	[no]
In off mode	P_o	0.00	W		electronic room temperature control plus day timer	[no]
In standby mode	P_{sm}	0.00	W		electronic room temperature control plus week timer	[no]
In idle mode	P_{idle}	0.00	W		Two or more manual stages, no room temperature control	[no]
In network standby	P_{nsm}	0.00	W		**Other control options (multiple selections possible)**	
Standby mode with display of information or status			[no]		with electronic room temperature control	[no]
Seasonal space heating energy efficiency in active mode	$\eta_{S,on}$	85.0	%		room temperature control, with presence detection	[no]
					room temperature control, with open window detection	[no]
					with distance control option	[no]
					with adaptive start control	[no]
					with working time limitation	[no]
					with black bulb sensor	[no]
					Self-learning functionality	[no]
					Control accuracy	[no]

Recycling

Our packaging is recyclable, please recycle where facilities exist.

Waste electrical products should not be disposed of with household waste. Please recycle where facilities exist.

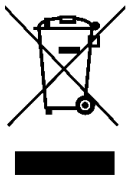

Check with your Local Authority or retailer for recycling advice.

We're happy to recycle your old fan heater for free. Simply bring it to store within 28 days of purchase of your new heater, with your receipt and we'll make sure your old unit stays out of landfill.

Customer Service

If you have any issues with this product, you can call our Customer Service team on:
0345 165 6565 Monday to Friday **9am to 5:00pm.**
Alternatively, you can contact our team by Live Chat on: **Dunelm.com**
Monday to Friday 8am – 8:30pm
Saturdays 8am – 5:30pm
Sundays and bank holidays 9am – 4:30pm.

2 YEARS	This product is covered by a Guarantee. Any accidental damage caused by misuse is not covered.
The Guarantee is valid from the date of purchase. Please keep your proof of purchase as we will need to see this to validate your Guarantee. The Guarantee applies only when the product has been used for domestic use only within England, Scotland, Wales, Northern Ireland and Jersey.	
For further information, please see our Guarantee T&C document on the product page on Dunelm.com or contact our customer service team.	

FSC

MIX

Paper

FSC® C219244

www.dunelm.com

Made In China

Dunelm (Soft Furnishings) Ltd. LE7 1AD
& Dunelm (Soft Furnishings) Holding Ltd. Dublin D12 WR25