2000W 9 Fin Oil Filled Radiator

30162418

Installation & Care Instructions

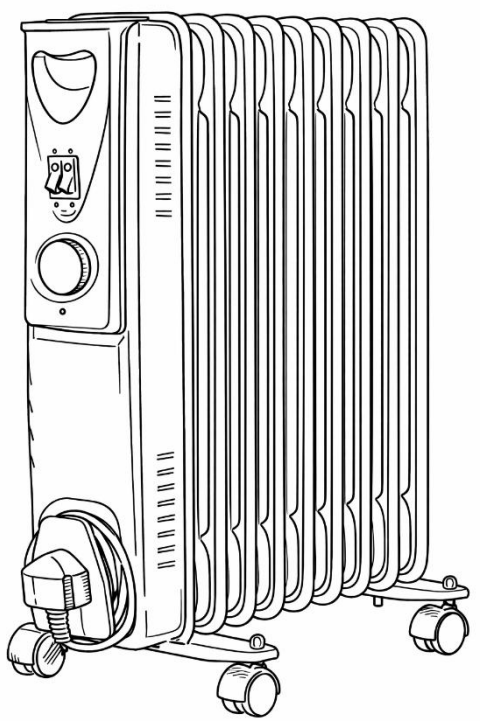

www.dunelm.com

Contents

Page No.	
2	Contents
3	Getting Started
3-5	Safety Advice
6	Parts Supplied
7	Description of Parts
7	Before first use of your Oil Filled Radiator
8-9	Assembling Your Oil Filled Radiator
10	Operating Instructions
10	Setting the Correct Temperature
11	Care and Use of Your Oil Filled Radiator
11	Non-Rewireable Mains Plug
11	Electrical Rating
12	ErP Data
13	Recycling
13	Customer Service
14	Guarantee

Getting Started

1. Check you have received all the parts as detailed in the parts supplied section. Beware that sometimes parts are packaged within the product/packaging so not immediately visible after opening.
2. Check that the product is intact and undamaged. Any issues, stop and contact our customer service team.
3. When using electrical appliances, basic safety precautions should always be followed.
4. Only use the product as described in this user manual. Any other use is considered improper and may result in damage to property or persons. The manufacturer or vendor cannot be held liable for damages or injuries incurred through improper or incorrect use.

Safety Advice

Dear Customer

- **IMPORTANT** – The first step you need to take is to ensure your safety! Please take time to read and understand these instructions before using the product.
- Please keep these instructions for future reference.
- **WARNING!** To avoid overheating, **DO NOT COVER** the radiator.
- **WARNING!** To reduce the risk of fire, keep textiles, curtains, or any other flammable material a minimum distance of 1m from the air outlet.
- **DO NOT** locate the appliance immediately below an electrical socket outlet.
- **DO NOT** use this radiator with a programmer, timer, separate remote-control system or any other device that switches the radiator on automatically, since a fire risk exists if the radiator is covered or positioned incorrectly.
- **DO NOT** use this radiator with an extension cable.
- Check that the voltage indicated on the data plate corresponds with that of the local network before connecting the appliance to the mains power supply.
- Close supervision is required when using this appliance near children.
- **DO NOT** leave this appliance within reach of children.
- This appliance can be used by children aged from 8 years and above and persons with reduced physical, sensory or mental capabilities or lack of experience and knowledge if they have been given supervision or instruction concerning use of the appliance in a safe way and understand the hazards involved. Children shall not play with the appliance. Cleaning and user maintenance shall not be made by children without supervision.
- Children of less than 3 years should be kept away unless continuously supervised.
- Children aged from 3 years, and less than 8 years, shall only switch on/off the appliance provided that it has been placed or installed in its intended normal operating position and they have been given supervision or instruction concerning use of the appliance in a safe way and understand the hazards involved.
- Keep the appliance and its cord out of reach of children aged less than 8 years
- Children aged from 3 years, and less than 8 years shall not plug in, regulate and clean the appliance or perform user maintenance
- **WARNING!** Some parts of this product can become very hot and cause burns. Particular attention has to be given where children and vulnerable people are present.
- **DO NOT** use this radiator in the immediate surroundings of a bath, a shower or a swimming pool.
- **DO NOT** use this radiator in small rooms when they are occupied by persons not capable of leaving the room on their own, unless constant supervision is provided.

Safety Advice

- **DO NOT** immerse the appliance or its cord in water or any other liquids.
- **DO NOT** leave the appliance unattended during use.
- **DO NOT** leave the appliance unattended whilst connected to the mains supply.
- Always use this appliance on a solid, level, heat resistant surface.
- **DO NOT** use this appliance outdoors.
- It is imperative to unplug the power cord after the appliance has been used, before it is cleaned and whilst being repaired.
- Repairs to electrical appliances should only be performed by a qualified electrician. Improper repairs may place user at serious risk.
- **DO NOT** operate this appliance with a damaged plug or cord, after a malfunction or after being dropped or damaged in any way.
- Regular, periodic checks should be carried out on the mains cable to ensure no damage is evident. Should there be any signs of damage the appliance should not be used.
- If the power cable is damaged, it should only be replaced by the manufacturer or a suitable qualified after-sales service in order to avoid a hazard
- **DO NOT** allow the mains cable to hang over sharp edges or come in contact with hot surfaces.
- **DO NOT** run the mains cable under carpets, rugs, etc.
- Allow the unit to cool before storage.
- Before cleaning, disconnect the appliance from the mains supply and allow to cool. Never place the appliance near to flammable material or high pressure containers. E.g. Paper, wood, petrol, solvents, spray canisters.
- This appliance is intended for household use only and should not be used for industrial purposes.
- **DO NOT** use any accessories or attachments with this appliance other than those supplied or recommended by supplier.
- **DO NOT** use any accessories or attachments with this appliance other than those supplied or recommended by supplier.
- **DO NOT** push objects into any openings as damage to the appliance and/or electric shock may occur.
- The appliance should not be installed in areas which have a fire-risk, such as garages, stables or wooden sheds; this is applicable also for rooms in which highly inflammable gasses or dust can develop. Danger of fire!
- Unplug after each use. Grasp the plug, not the cord.

⚠ CAUTION

ONCE ASSEMBLED ALLOW THE RADIATOR TO STAND UPRIGHT FOR ONE HOUR TO ALLOW FOR THE OIL TO SETTLE

THIS RADIATOR MUST ONLY BE OPERATED IN THE UPRIGHT POSITION WITH THE CASTORS FITTED.

THIS APPLIANCE MUST BE EARTHED

This appliance has been ERP classified as a portable space radiator and should only be used for supplementary, secondary or temporary heating. It should not be considered for primary permanent heating in a room or dwelling.

During the first few minutes of initial use, you may notice a slight odour and a little smoke. This is normal and will quickly disappear, It is the coating applied to the heating elements to prevent any corrosion during transit.

Parts Supplied

Radiator	U-Bolts (x2) and Wing Nuts (x4)	Castors (x4) and Domed Nuts (x4)
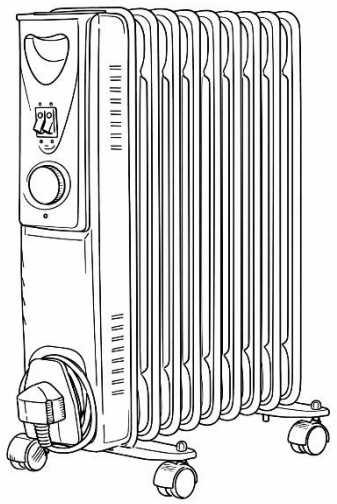	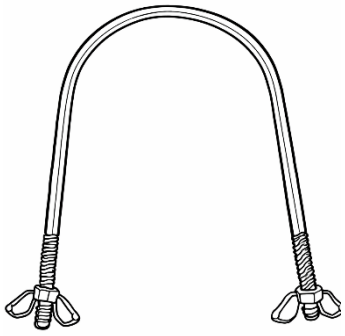	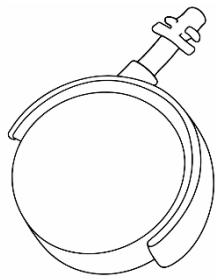

Wheel Plates (x2)


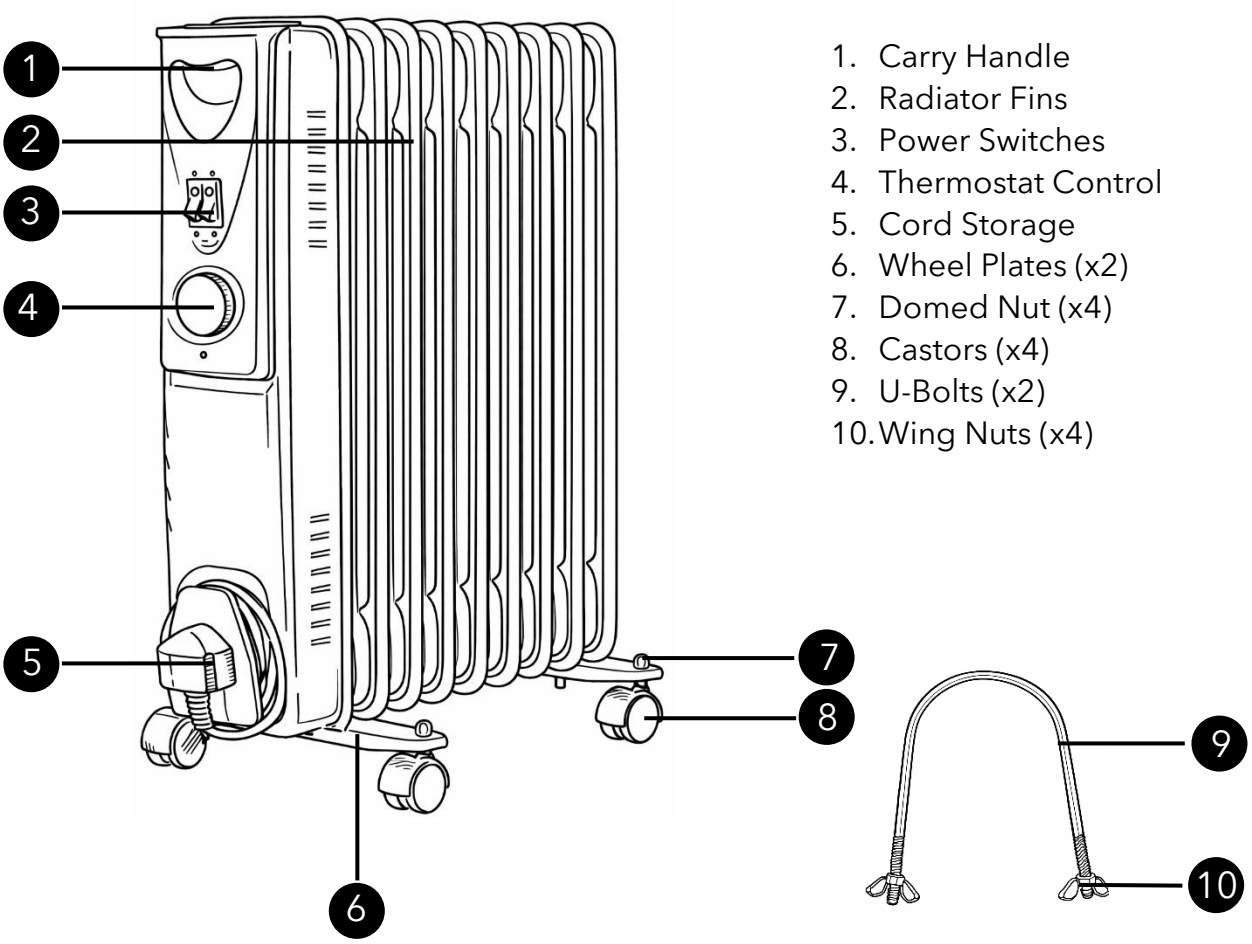

1. Carry Handle
2. Radiator Fins
3. Power Switches
4. Thermostat Control
5. Cord Storage
6. Wheel Plates (x2)
7. Domed Nut (x4)
8. Castors (x4)
9. U-Bolts (x2)
10. Wing Nuts (x4)

Before first use of your Oil Filled Radiator

Remove all packaging materials and discard responsibly.
Ensure that all parts are present before assembling your Oil Filled Radiator – see **Description of Parts** above.

STEP 1 Place protective material (such as cardboard) on the floor to prevent scratching or damage to the appliance or floor.

STEP 2 Turn the radiator upside down onto the material ensuring that it is stable.

The oil inside the radiator will be heard to settle inside, this is quite normal.

STEP 3 Attach the **Castors** (8) to the **Wheel Plate** (6) using the **Domed Nuts** (7) supplied as shown to the right, tighten with a suitable spanner (not supplied).

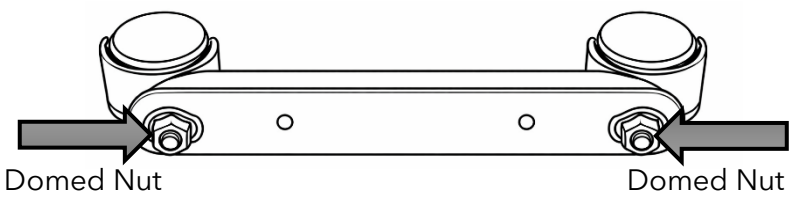

STEP 4 Remove **Wing Nuts** (10) from **U-Bolts** (9). Position **U-Bolts** (9) between first and second fins behind control housing. Attach **Wheel Plate** (6) from **STEP 3** above. Secure using the **Wing Nuts** (10) as shown in the image below. Do not overtighten.

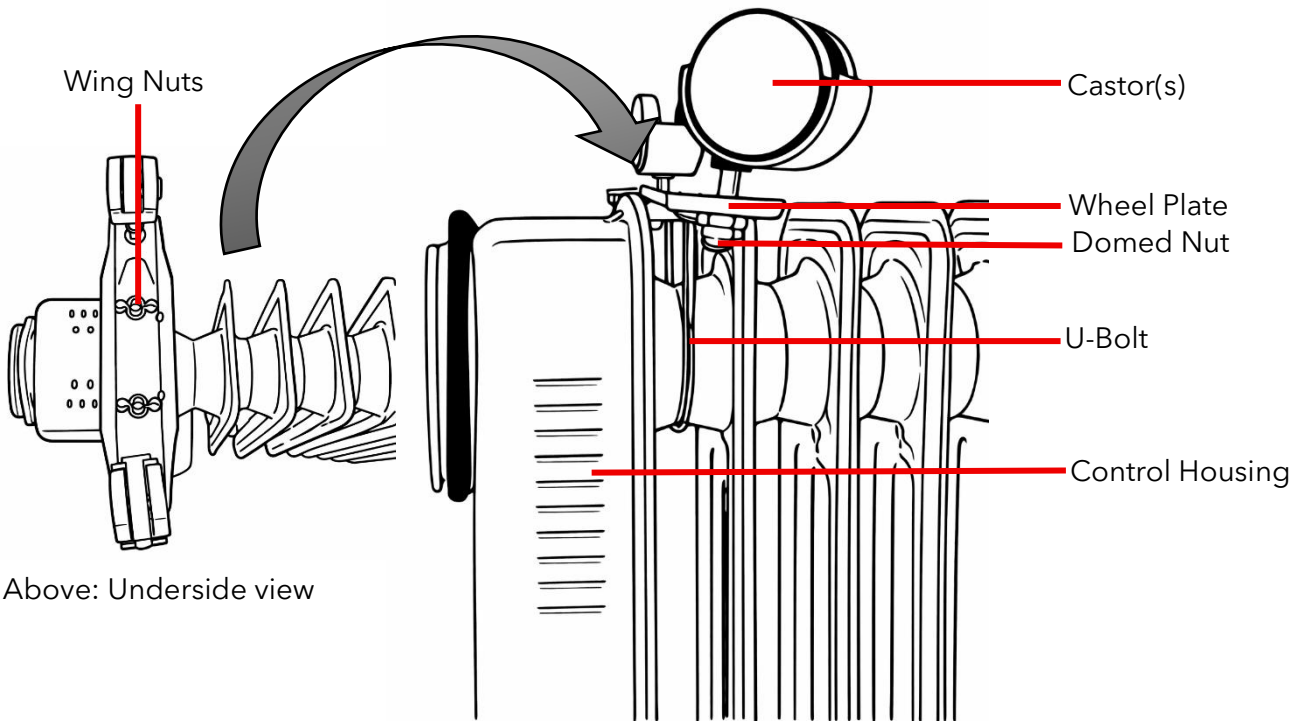

Above: Underside view

STEP 5 Remove **Wing Nuts** (10) from remaining **U-Bolts** (9). Position **U-Bolts** (9) between end fin and adjacent fin. Attach remaining **Wheel Plate** (6) from **STEP 3** above. Secure using the **Wing Nuts** (10) as shown in the image below. Do not overtighten.

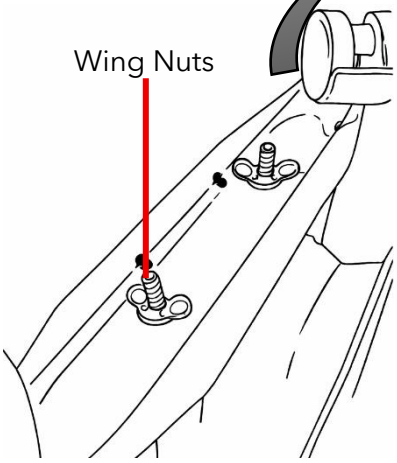

Above: Underside view

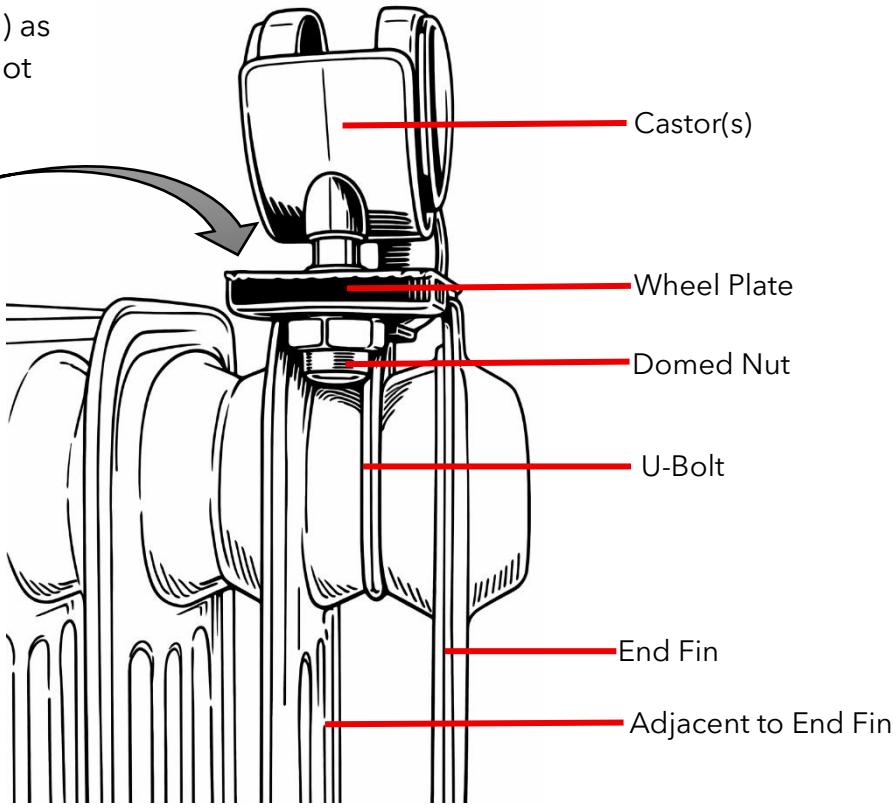

STEP 6 After attaching **Castors** (8) and **Wheel Plates** (6), turn radiator upright onto **Castors** (8). Place the radiator into the desired position ensuring that it is stable and vertical. The oil inside the radiator will be heard to settle inside, this is quite normal.

Operating Instructions

STEP 1 Ensure that the **Power Switches** (3) are in the Off (O) position.

STEP 2 Insert the mains plug into the nearest socket.

STEP 3 To turn the radiator on, press the **Power Switches** (3) as follows to select the desired level.

Power Switches (3)	**Heat Setting**
Press Just Switch **I**	Low (800W)
Press Just Switch **II**	Medium (1200W)
Press Both Switches **III**	High (2000W)

STEP 4 Rotate the **Thermostat Control** (4) to the fully clockwise position. The indicator lights will illuminate on the **Power Switches** (3) to show that the radiator is heating up.

STEP 5 To switch the radiator off, press both the **Power Switches** (3) to the Off (O) position.

The indicator light in the **Power Switches** (3) will illuminate and go out indicating that the set temperature is being maintained, this is quite normal.

Setting the Correct Temperature

- Rotate the **Thermostat Control** (4) to the maximum position and allow the room to warm up. Once the desired room temperature has been reached turn the **Thermostat Control** (4) anticlockwise until the radiator just clicks off then turn it back up clockwise very slightly. The **Thermostat Control** (4) will now maintain the room temperature, if necessary, further increasing or decreasing the **Thermostat Control** (4) may be required to 'fine tune' the ideal room temperature.
- Press the **Power Switches** (3) to the 'O' position to switch the radiator off.

Care and Use of Your Oil Filled Radiator

Always disconnect the fan radiator from the mains power supply and allow to cool before cleaning.
Clean outside of the radiator with a clean damp cloth. Never clean with harsh or abrasive cleaners.
Do not submerge any part of the radiator in water or any other liquids.
Do not wrap the mains cable around the appliance.

Non-Rewireable Mains Plug

If your appliance is supplied with a non-rewireable plug fitted to the mains lead and should the fuse need replacing, you must use an ASTA approved one (conforming to BS 1362 of the same rating). Never use a plug with the fuse cover missing. If in doubt, consult a qualified electrician.
If you need to remove the plug -**DISCONNECT FROM THE MAINS**- and then cut it off the mains lead and immediately dispose of it safely. Never attempt to reuse the plug or insert it into a socket outlet as there is a danger of electric shock.

Electrical Rating

220-240V~ 50/60Hz 2000W
Model Number: 30162418
Protection Class: I (This appliance must be earthed)
This equipment complies with Annex III of Commission Regulation (EU) 2023/826
ErP: Off mode power consumption is 0W, which is within the permitted limit of 0.50W in accordance with Commission Regulation (EU) 2023/826

Model	30162418					
Item	Symbol	Value	Unit		Item	Unit
Heat output					**Type of heat input, for electric storage local space heaters only (select one)**	
Nominal heat output	P_{nom}	2.0	KW		manual heat charge control, with integrated thermostat	Not applicable
Minimum heat output (indicative)	P_{min}	0.8	KW		manual heat charge control with room and/or outdoor temperature feedback	Not applicable
Maximum continuous heat output	$P_{max,c}$	2.0	KW		electronic heat charge control with room and/or outdoor temperature feedback	Not applicable
Power Consumption					fan assisted heat output	Not applicable
In off mode	P_0	0	KW		**Type of heat output/room temperature control (select one)**	
In Standby mode	P_{sm}	0	KW		single stage heat output and no room temperature control	[no]
In idle mode	P_{idle}	0	KW		Two or more manual stages, no room temperature control	[no]
					with mechanic thermostat room temperature control	[yes]
					with electronic room temperature control	[no]
					electronic room temperature control plus day timer	[no]
					electronic room temperature control plus week timer	[no]
					Other control options (multiple selections possible)	
					room temperature control, with presence detection	[no]
					room temperature control, with open window detection	[no]
					with distance control option	[no]
					with adaptive start control	[no]
					with working time limitation	[no]
					with black bulb sensor	[no]

Recycling

Our packaging is recycable, please recycle where facilities exist.

Waste electrical products should not be disposed of with household waste. Please recycle where facilities exist.

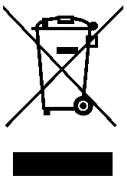

Check with your Local Authority or retailer for recycling advice.

We're happy to recycle your old fan radiator for free. Simply bring it to store within 28 days of purchase of your new radiator, with your receipt and we'll make sure your old unit stays out of landfill.

This radiator is filled with a precise quantity of special oil. Repairs requiring opening of the oil container are only to be made by the manufacturer.

Whilst scrapping the radiator, follow the regulations concerning the disposal of oil.

Customer Service

If you have any issues with this product, you can call our Customer Service team on:
0345 165 6565 Monday to Friday **9am to 5:00pm.**
Alternatively, you can contact our team by Live Chat on: **Dunelm.com**
Monday to Friday 8am – 8:30pm
Saturdays 8am – 5:30pm
Sundays and bank holidays 9am – 4:30pm.

2 YEARS	This product is covered by a Guarantee. Any accidental damage caused by misuse is not covered.
The Guarantee is valid from the date of purchase. Please keep your proof of purchase as we will need to see this to validate your Guarantee. The Guarantee applies only when the product has been used for domestic use only within England, Scotland, Wales, Northern Ireland and Jersey.	
For further information, please see our Guarantee T&C document on the product page on Dunelm.com or contact our customer service team.	

FSC
www.fsc.org
MIX
Paper | Supporting responsible forestry
FSC® C143330

www.dunelm.com

Dunelm (Soft Furnishings) Ltd. LE7 1AD
& Dunelm (Soft Furnishings) Holding Ltd. Dublin D12 WR25

Made In China